ASSEMBLY INSTRUCTION FOR
DINING CHAIR
D-15580-5-SC

Caution: Please read instructions thoroughly before unpacking assembly parts. Sharp, exposed staple tips can cause injury, therefore, for your protection, please remove any exposed staples used in packing.

1. We recommend that you should assemble this product with the assistance of another person; this will make assembly easier, and will help to eliminate damage to the product or injury to persons during assembly.
2. Be sure to check all packing materials carefully for small parts that may have come loose inside the carton during shipment.
3. Please do not over tighten screws or bolts.
4. Please put all parts on a non-abrasive floor before assembly, and follow the assembly steps to assemble your newly purchased product correctly and efficiently.

PARTS LIST

NO.	PART DESC	CODE	Q'TY
A	Back Frame 	PD-15580-5-SCBFR	1pc
B	Seat Frame 	PD-15580-5-SCSEA1 PD-15580-5-SCSEA2	1pc
C	L-Leg 	PD-15580-5-SCLEGL	1pc
D	R-Leg 	PD-15580-5-SCLEGR	1pc
E	L-Stretcher 	PD-15580-5-SCSTRL	1pc
F	R-Stretcher 	PD-15580-5-SCSTRR	1pc

HARDWARE LIST

NO.	HARDWARE DESC		CODE	Q'TY
1		Connecting Long Bolt w/ Flat washer & Spring washer (Ø1/4" x 2-1/4")	PD-15580-SCHW	4pcs
2	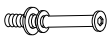	Connecting Long Bolt w/ Flat washer & Spring washer (Ø1/4" x 3-1/4")		4pcs
3		Connecting Short Bolt w/ Flat washer & Spring washer (Ø1/4" x1-1/2")		2pcs
4		Screw (#8 x2")		4pcs
5		Allen key (M4)		1pc
		SCREW-DRIVER (NOT PROVIDED)		

Only tighten all bolts when all bolts aligned with bolt inserts.

STEP: 1

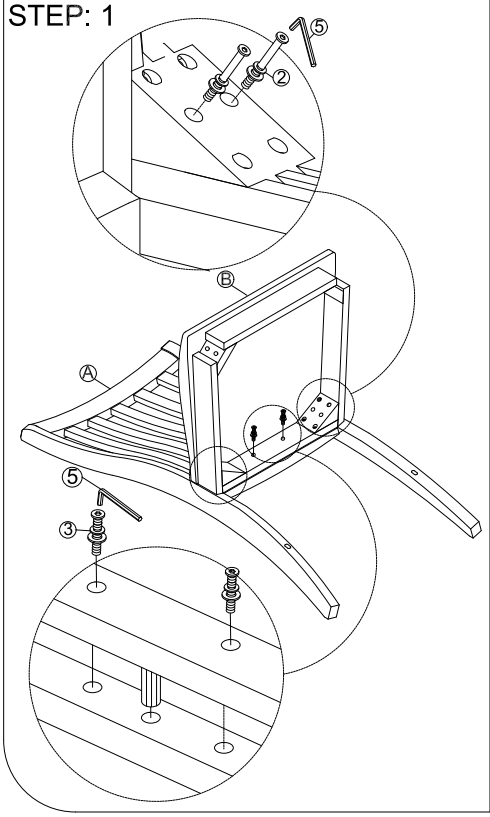

STEP: 2

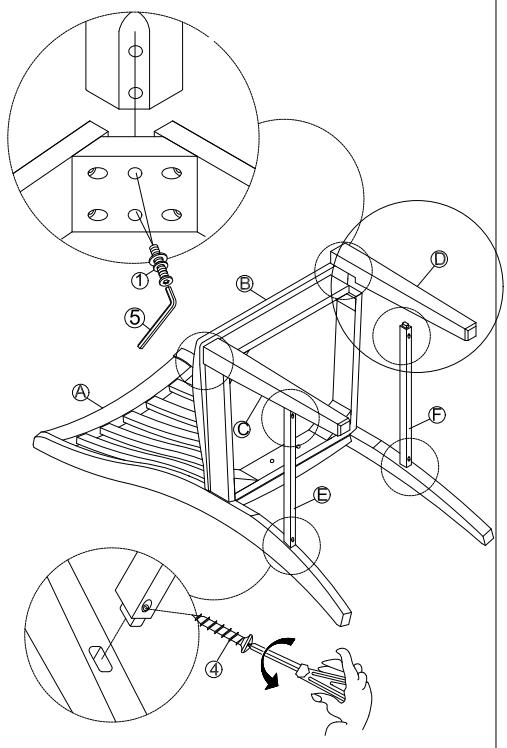

Completed

