Assembly Instruction

Advice:
1. Power tools are suggested to be used during installation.
2. More than one person may be required to assemble this product.
3. The best advice is not tightening up any screws until the whole piece is assembled. If having difficulty aligning holes, loosen the screws already installed and readjust the armrest.
4. To avoid mess-up or mismatch, please use the hardware of each box to install the furniture in the same box.

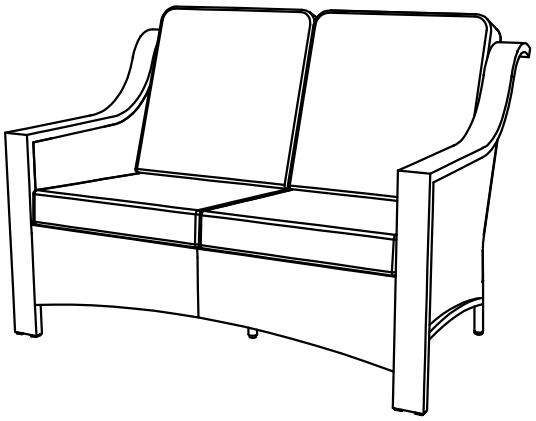

Loveseat

Assembly Video

Parts List

NO.	Picture	Description	QTY
L-A	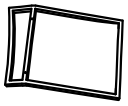	Right Sofa Back	1
L-B	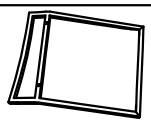	Left Sofa Back	1
L-C	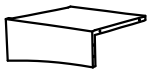	Right Sofa Seat	1
L-D	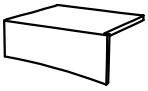	Left Sofa Seat	1
L-E	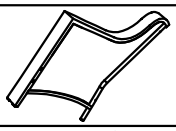	Right Arm	1
L-F	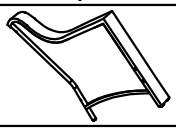	Left Arm	1
L-G	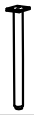	Center Sofa Leg	1
L-H	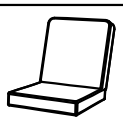	Seat and Back Cushion	2

NO.	Picture	Description	QTY
Z		Screw (M6*16)	4
V	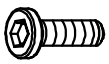	Screw (M6*35)	8
T	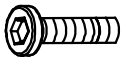	Screw (M6*45)	4
S	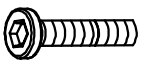	Screw (M6*60)	7
N		Washer (M6)	30
M		Nut (M6)	7
L		Allen Key	1
J	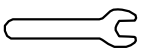	Wrench (M6)	1

STEP 1

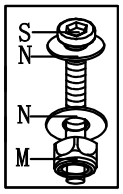

X3

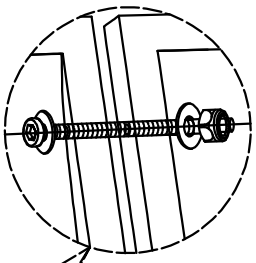

There are locking screw holes on side of the left and right sofa back panels.

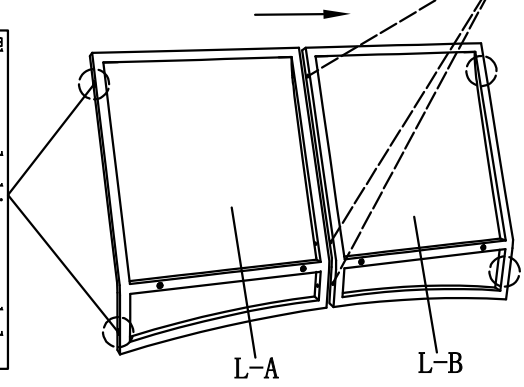

STEP 2

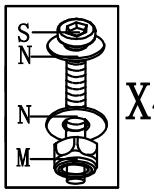

X4

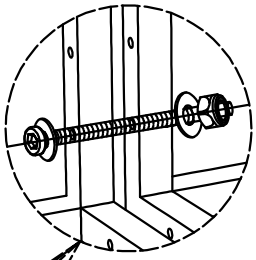

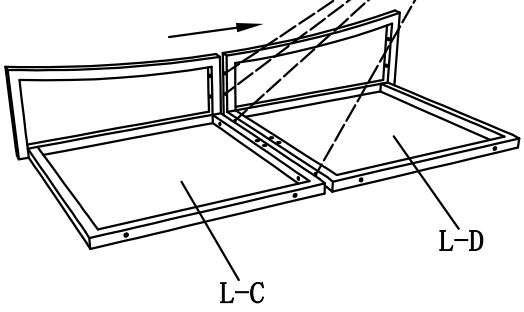

The best advice is not tightening up any screws until the whole piece is assembled.

STEP 3

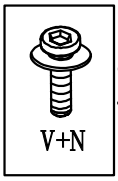

X4

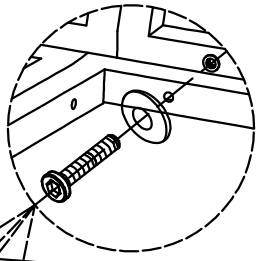

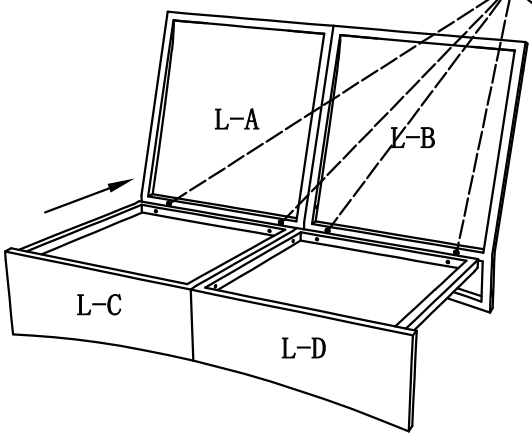

STEP 4

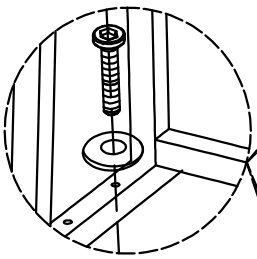

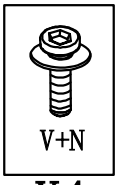

X4

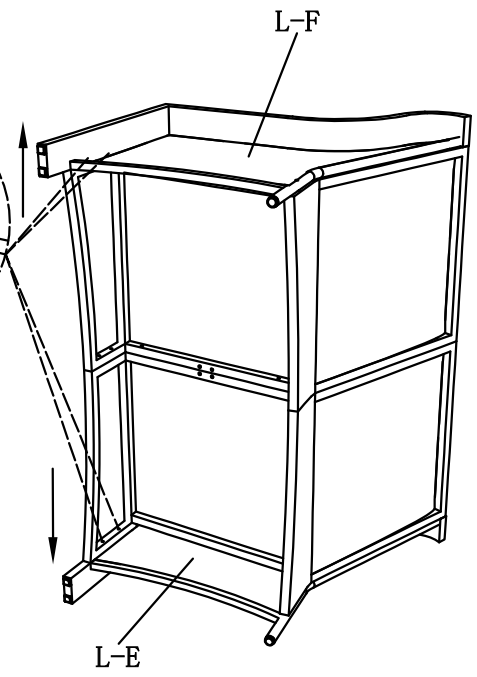

STEP 5

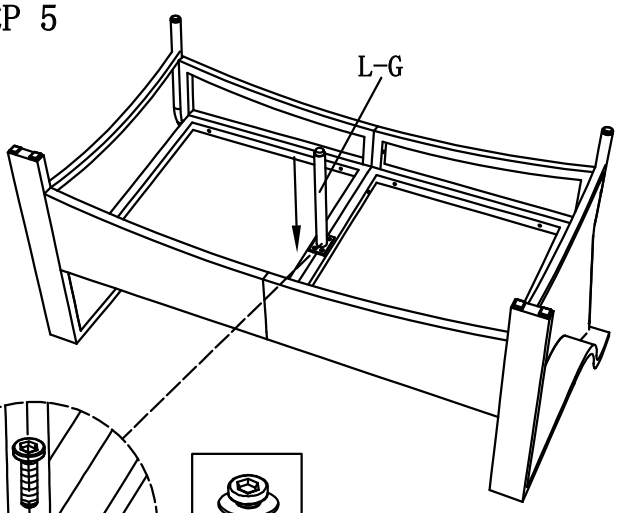

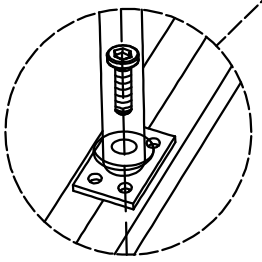

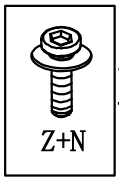

X4

Please tap the cushions and wait 48 to 72 hours to fully rebound

FINISH

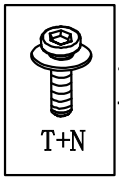

X4

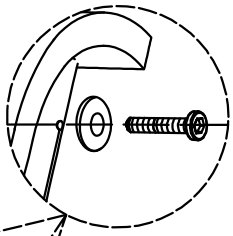

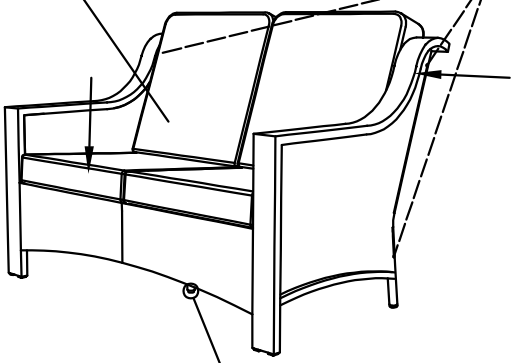

When finish all the assembly of the sofa, adjust the middle legs and make the sofa parallel to the ground.