Assembly Instruction

Advice:
1. Power tools are suggested to be used during installation.
2. More than one person may be required to assemble this product.
3. The best advice is not tightening up any screws until the whole piece is assembled. If having difficulty aligning holes, loosen the screws already installed and readjust the armrest.
4. To avoid mess-up or mismatch, please use the hardware of each box to install the furniture in the same box.

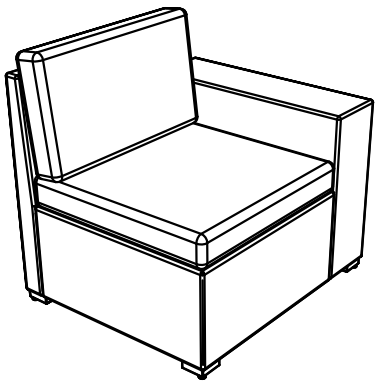

Left Arm Sofa

Assembly Video

Parts List

Part Number	Picture	Description	QTY
LA-A	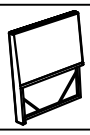	Chair Back	1
LA-B	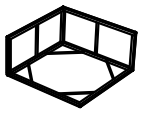	Chair Seat	1
LA-C	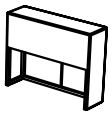	Left Arm	1
S		Screw (M6*60)	7
T		Screw (M6*45)	1
X		Screw (M6*25)	8
N		Washer (M6)	15

Part Number	Picture	Description	QTY
M		Nut (M6)	7
E	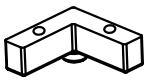	L Shape Foot	4
F		Fastener Clip	2
L		Allen Key	1
J		Wrench (M6)	1
LA-D	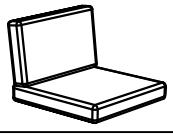	Seat and Back Cushion	1

STEP 1

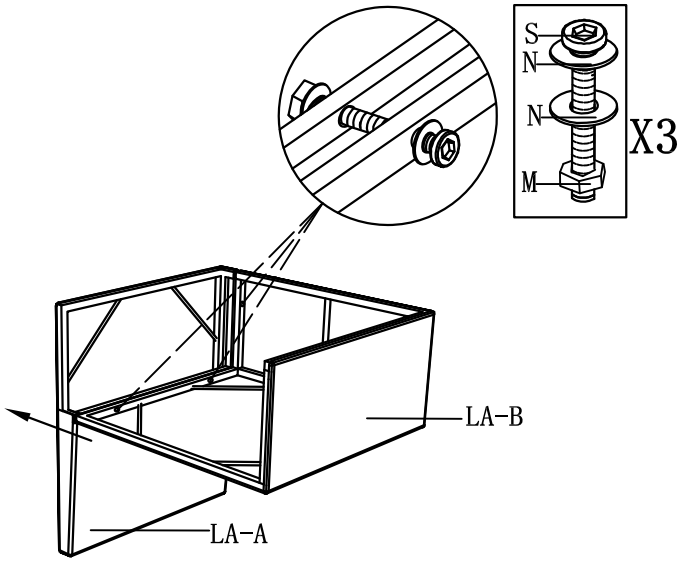

STEP 2

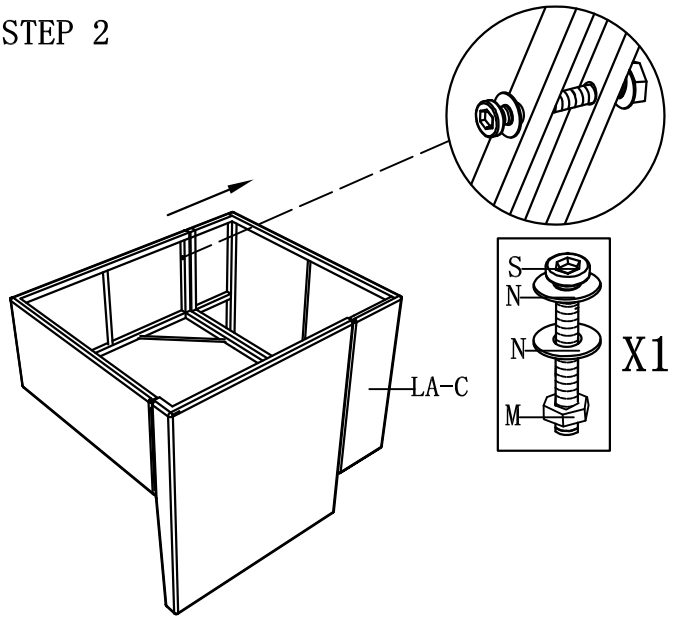

The best advice is not tightening up any screws until the whole piece is assembled.

STEP 3

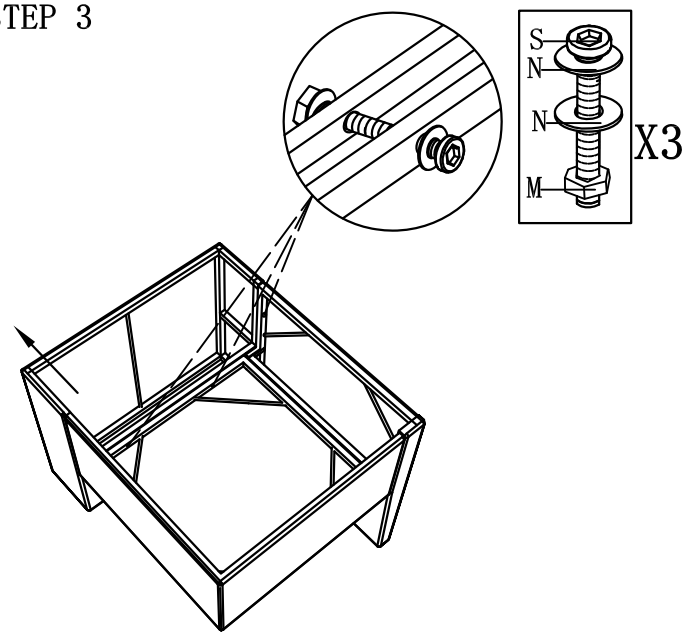

STEP 4

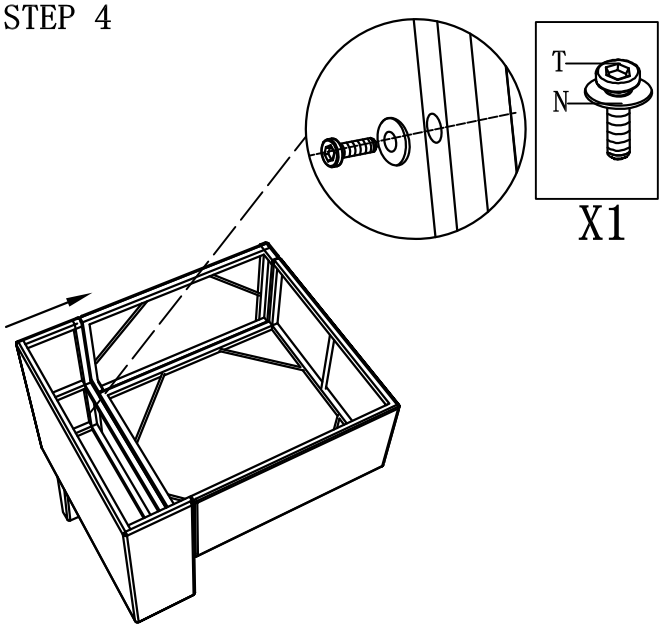

STEP 5

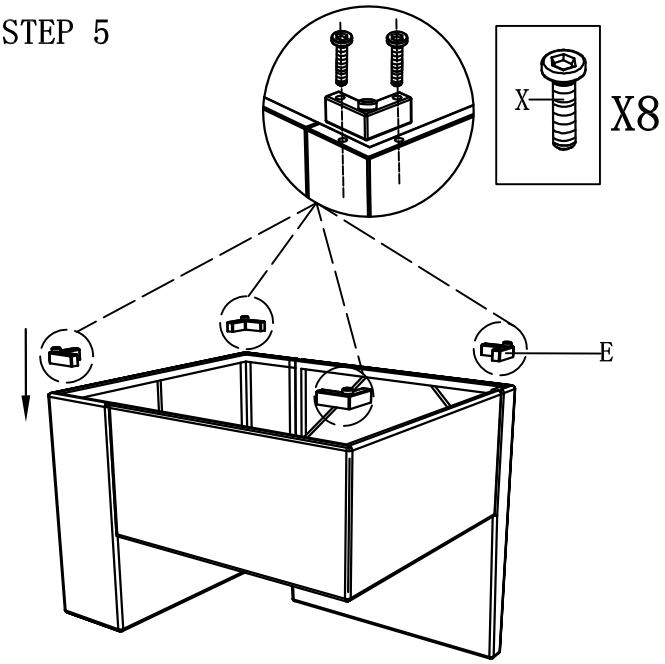

FINISH

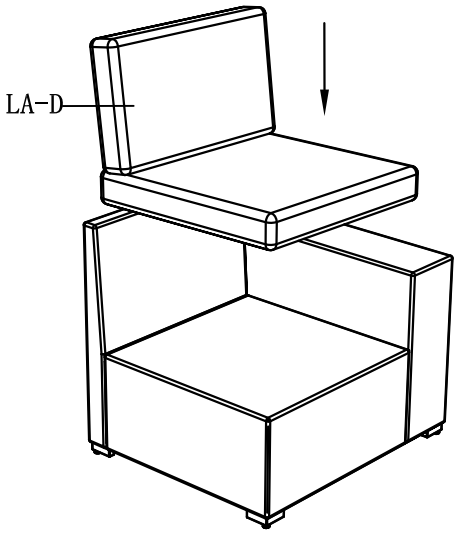

Please tap the cushions and wait 48 to 72 hours to fully rebound

Assembly Instruction

Advice:
1. Power tools are suggested to be used during installation.
2. More than one person may be required to assemble this product.
3. The best advice is not tightening up any screws until the whole piece is assembled. If having difficulty aligning holes, loosen the screws already installed and readjust the armrest.
4. To avoid mess-up or mismatch, please use the hardware of each box to install the furniture in the same box.

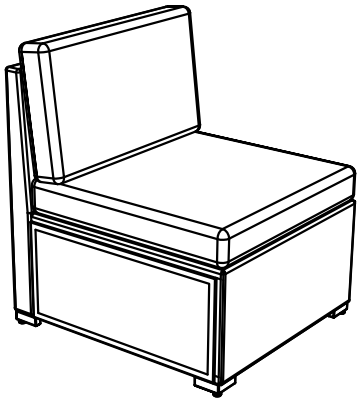

Armless Sofa

Assembly Video

Parts List

Part Number	Picture	Description	QTY
AS-A		Chair Back	1
AS-B	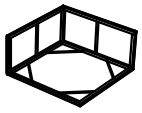	Chair Seat	1
AS-C	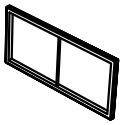	Side Panel	1
S		Screw (M6*60)	4
V		Screw (M6*35)	3
X		Screw (M6*25)	8
N		Washer (M6)	11

Part Number	Picture	Description	QTY
M		Nut (M6)	4
E		L Shape Foot	4
F		Fastener Clip	2
L	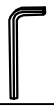	Allen Key	1
J		Wrench (M6)	1
AS-D	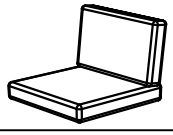	Seat and Back Cushion	1

STEP 1

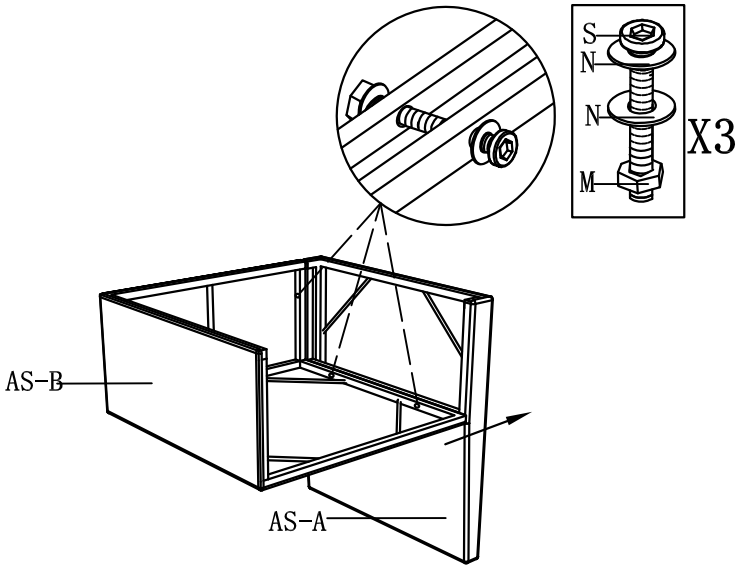

STEP 2

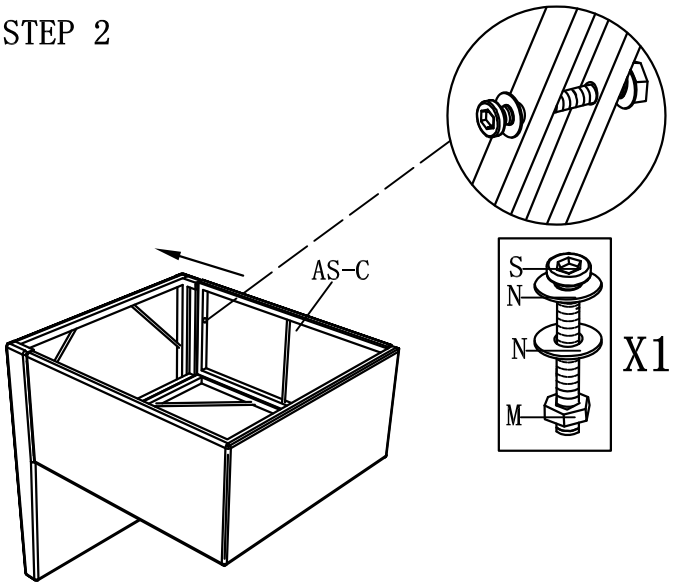

The best advice is not tightening up any screws until the whole piece is assembled.

STEP 3

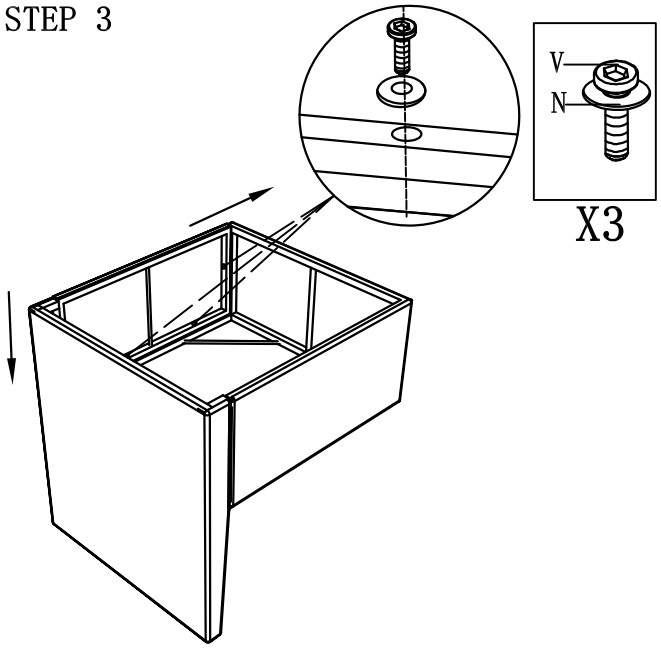

STEP 4

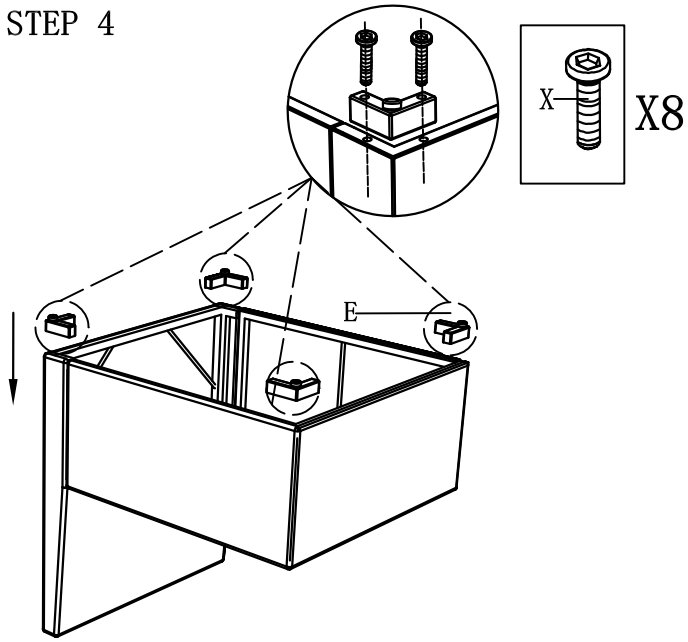

STEP 5

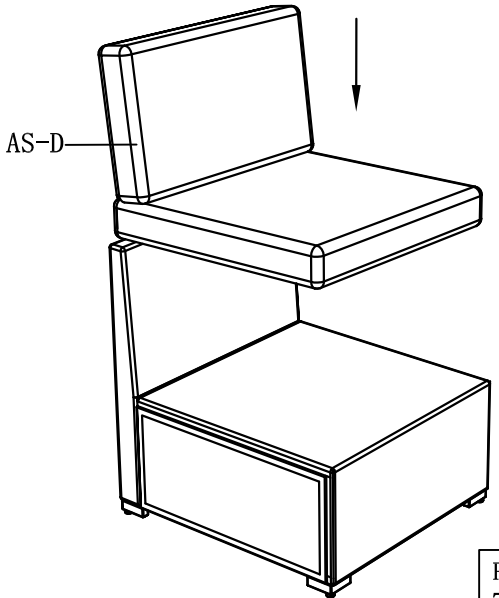

FINISH

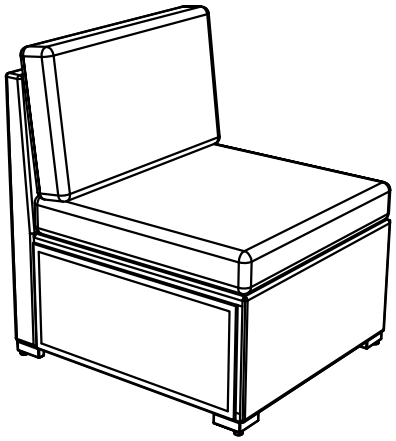

Please tap the cushions and wait 48 to 72 hours to fully rebound

Assembly Instruction

Advice:
1. Power tools are suggested to be used during installation.
2. More than one person may be required to assemble this product.
3. The best advice is not tightening up any screws until the whole piece is assembled. If having difficulty aligning holes, loosen the screws already installed and readjust the armrest.
4. To avoid mess-up or mismatch, please use the hardware of each box to install the furniture in the same box.

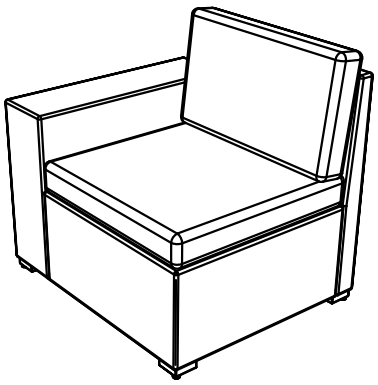

Right Arm Sofa

Assembly Video

Parts List

Part Number	Picture	Description	QTY
RA-A	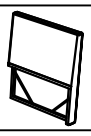	Chair Back	1
RA-B	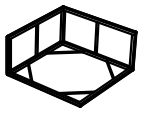	Chair Seat	1
RA-C	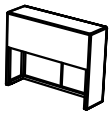	Right Arm	1
S		Screw (M6*60)	7
T		Screw (M6*45)	1
X		Screw (M6*25)	8
N		Washer (M6)	15

Part Number	Picture	Description	QTY
M		Nut (M6)	7
E		L Shape Foot	4
F		Fastener Clip	2
L		Allen Key	1
J		Wrench (M6)	1
RA-D	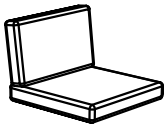	Seat and Back Cushion	1

STEP 1

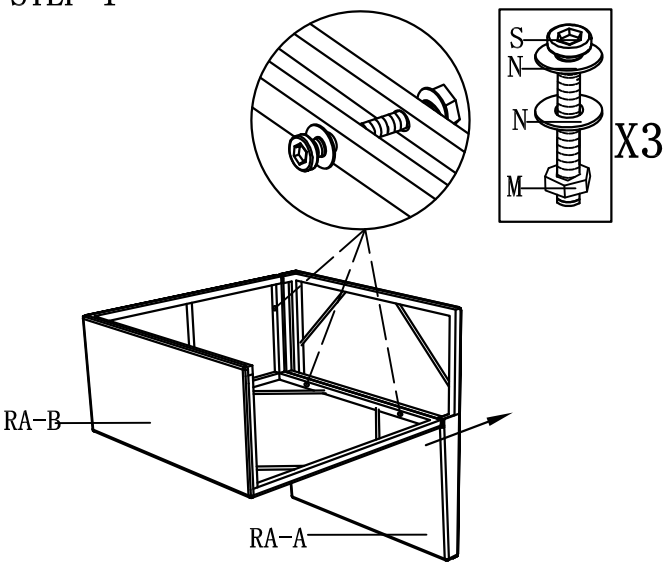

STEP 2

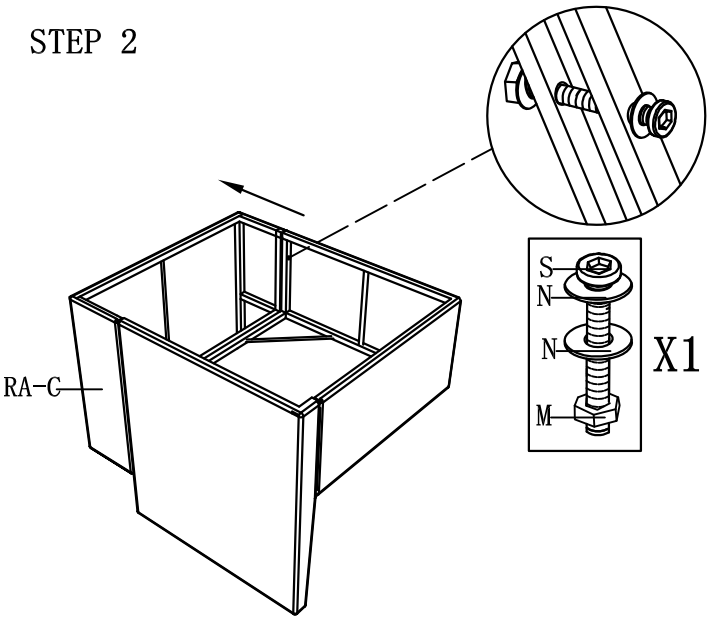

The best advice is not tightening up any screws until the whole piece is assembled.

STEP 3

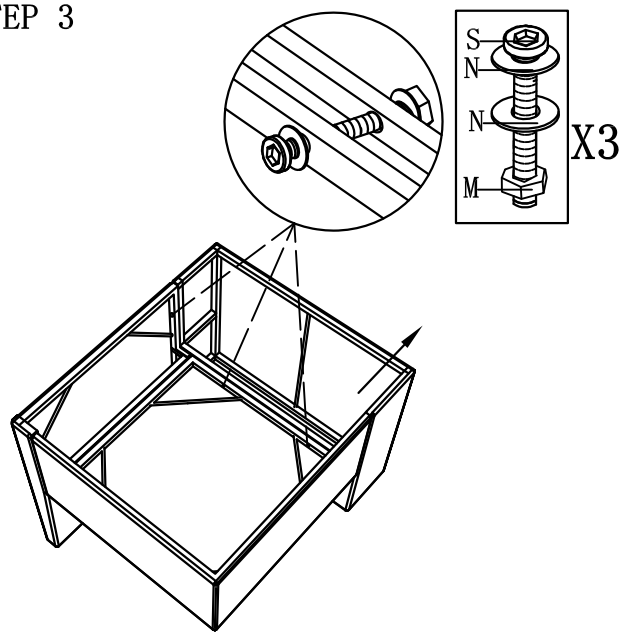

STEP 4

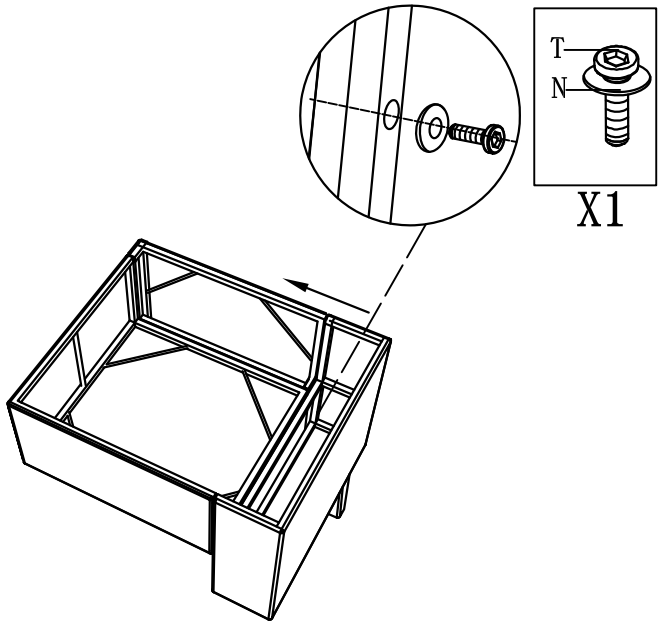

STEP 5

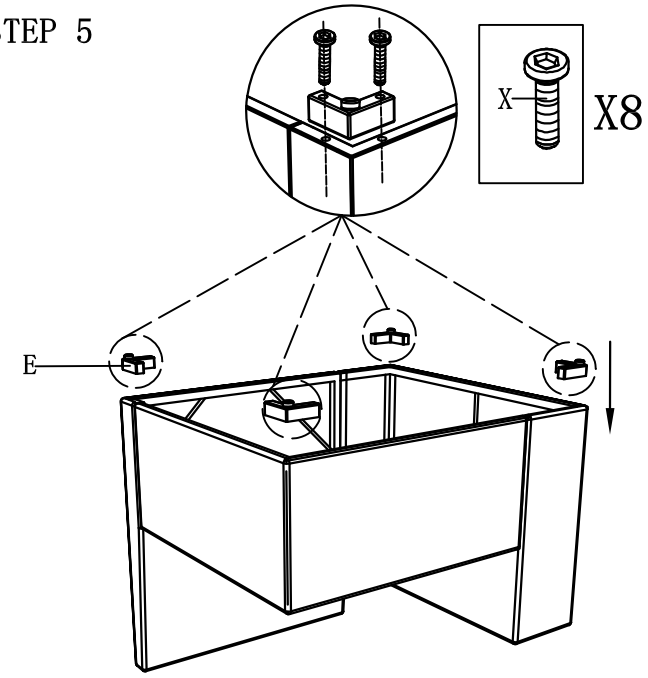

FINISH

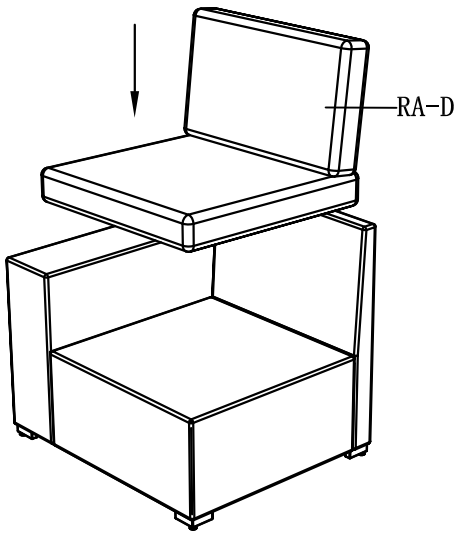

Please tap the cushions and wait 48 to 72 hours to fully rebound

Assembly Instruction

Advice:
1. Power tools are suggested to be used during installation.
2. More than one person may be required to assemble this product.
3. The best advice is not tightening up any screws until the whole piece is assembled. If having difficulty aligning holes, loosen the screws already installed and readjust the armrest.
4. To avoid mess-up or mismatch, please use the hardware of each box to install the furniture in the same box.

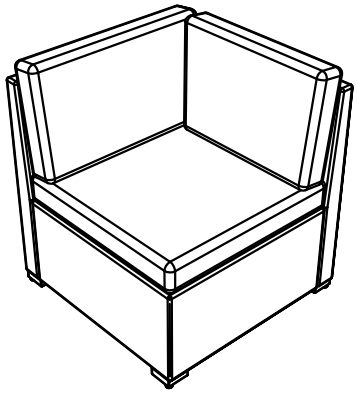

Corner Sofa

Assembly Video

Parts List

Part Number	Picture	Description	QTY
CS-A		Short Chair Back	1
CS-B	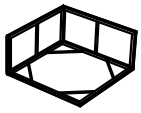	Chair Seat	1
CS-C	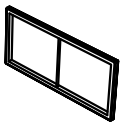	Side Panel	1
S		Screw (M6*60)	9
V		Screw (M6*35)	3
X		Screw (M6*25)	8
N		Washer (M6)	21

Part Number	Picture	Description	QTY
M		Nut (M6)	9
E		L Shape Foot	4
F		Fastener Clip	2
L		Allen Key	1
J		Wrench (M6)	1
CS-D	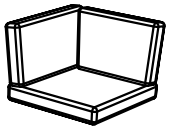	Seat and Back Cushion	1
CS-P	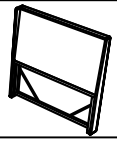	Long Chair Back	1

STEP 1

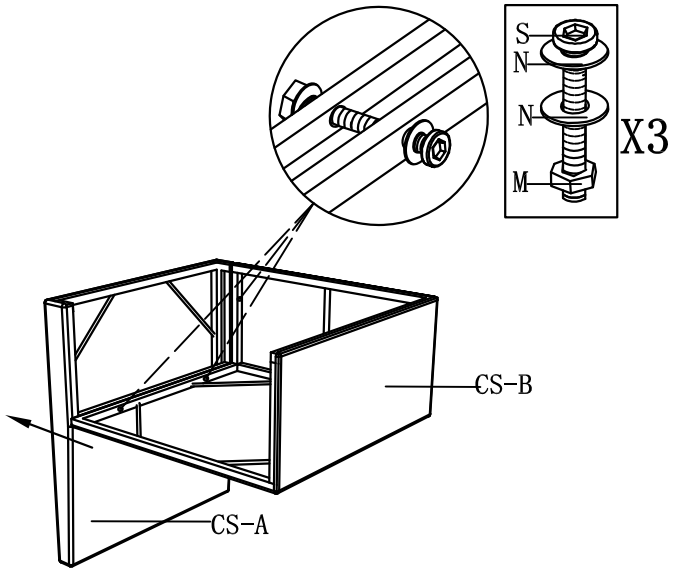

STEP 2

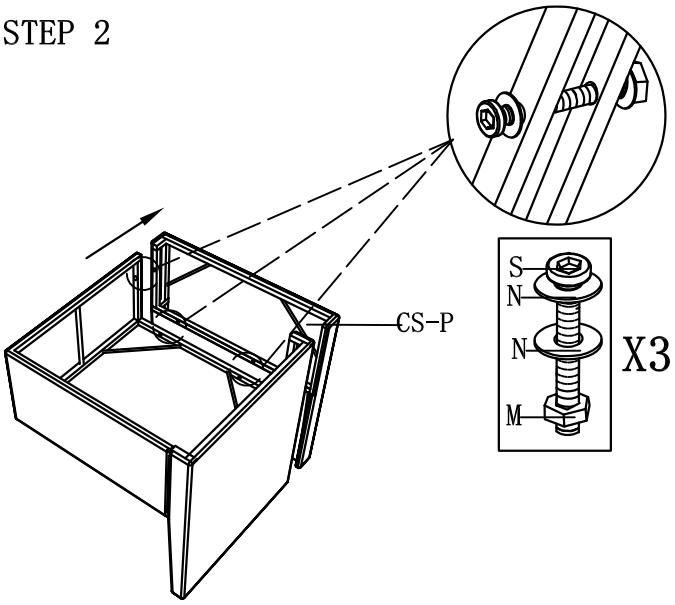

The best advice is not tightening up any screws until the whole piece is assembled.

STEP 3

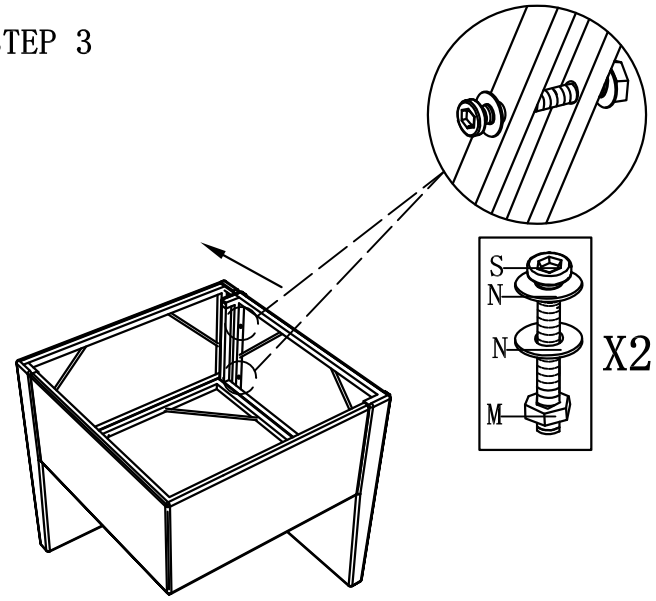

STEP 4

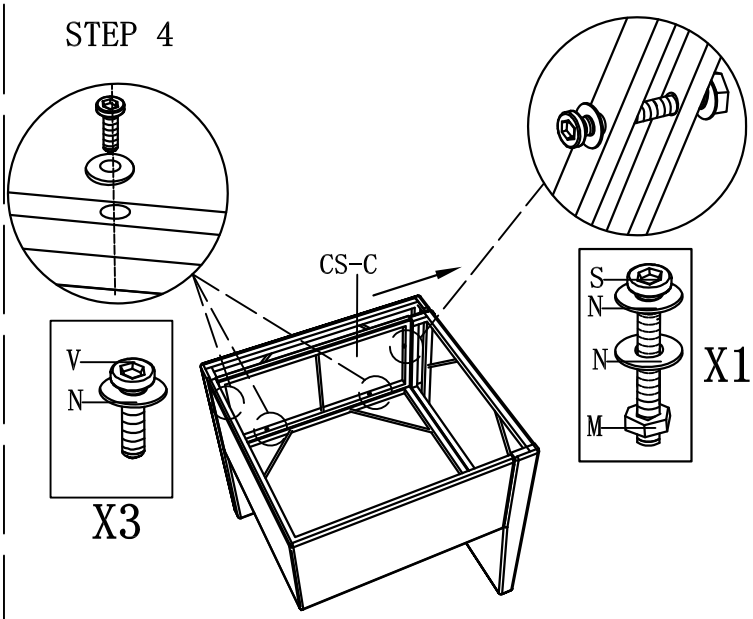

STEP 5

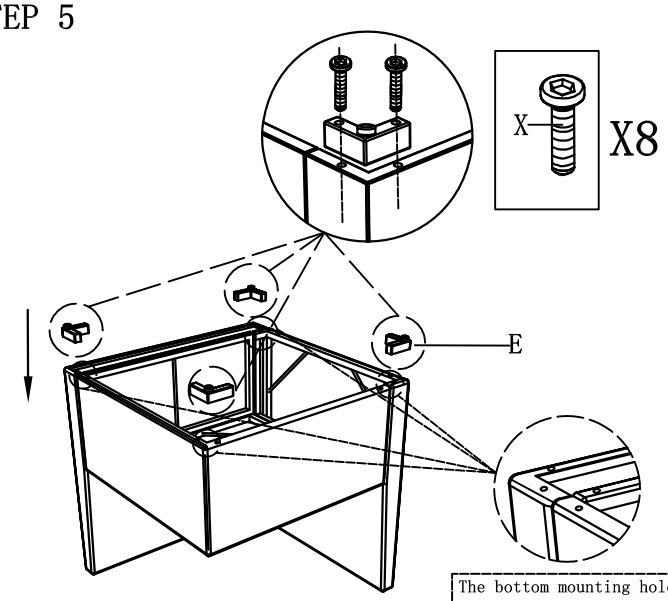

The bottom mounting holes are used for the L shape foot installed

FINISH

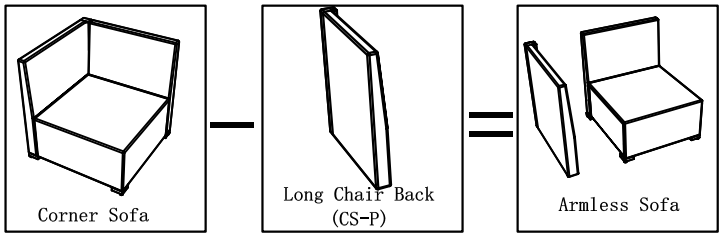

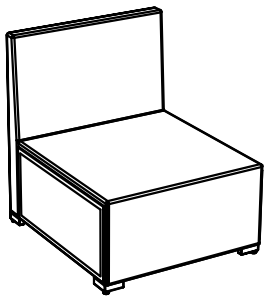

Armless Sofa

Corner sofa can be turned into an armless sofa, first remove the armrest next to the side panel as picture shown, then take down the L shape foot and install them on the other side

Please tap the cushions and wait 48 to 72 hours to fully rebound

Assembly Instruction

Advice:
1.Power tools are suggested to be used during installation.
2.More than one person may be required to assemble this product.
3.The best advice is not tightening up any screws until the whole piece is assembled.If having difficulty aligning holes,loosen the screws already installed and readjust the armrest.
4.To avoid mess-up or mismatch,please use the hardware of each box to install the furniture in the same box.

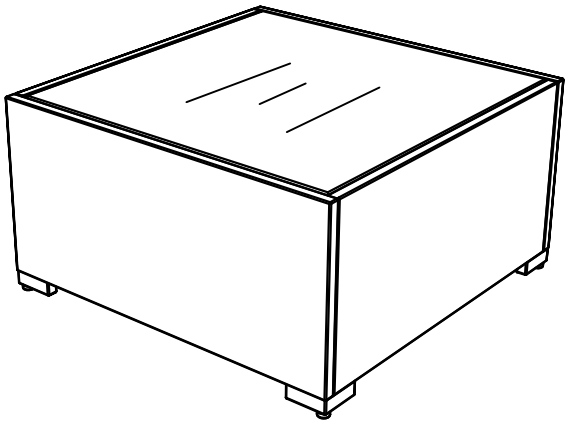

Table

Assembly Video

Parts List

Part Number	Picture	Description	QTY
T-A	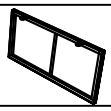	Long Side Panel	2
T-B	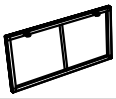	Short Side Panel	2
T-C		Glass Top	1
N		Washer (M6)	8
V		Screw (M6*35)	8
X		Screw (M6*25)	8
L		Allen Key	1
E	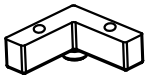	L Shape Foot	4

STEP 1

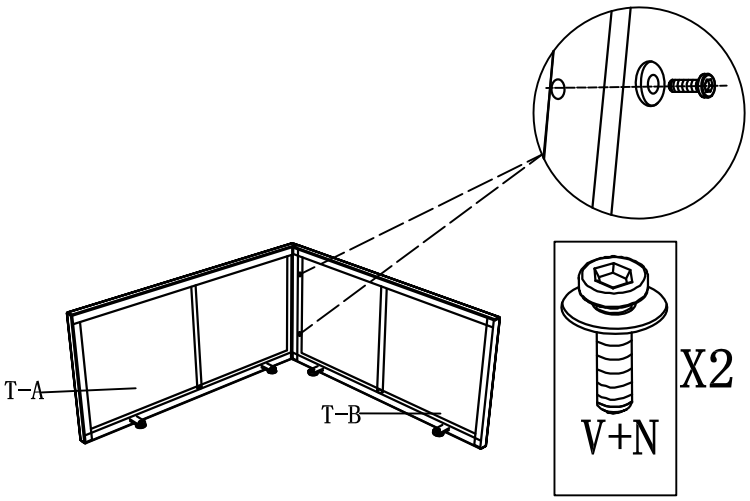

STEP 2

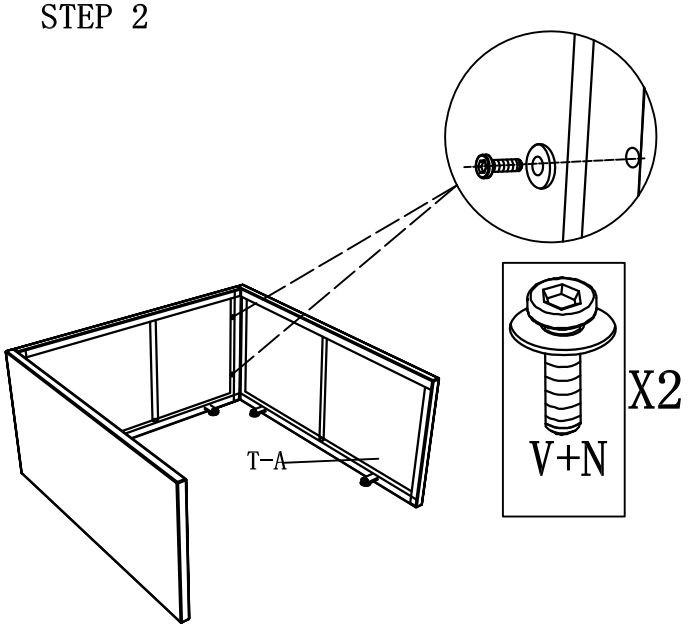

The best advice is not tightening up any screws until the whole piece is assembled.

STEP 3

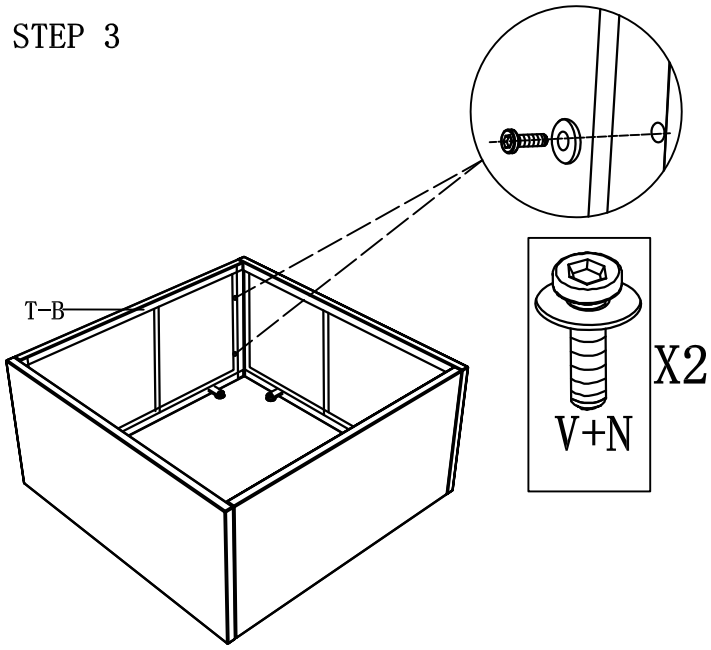

STEP 4

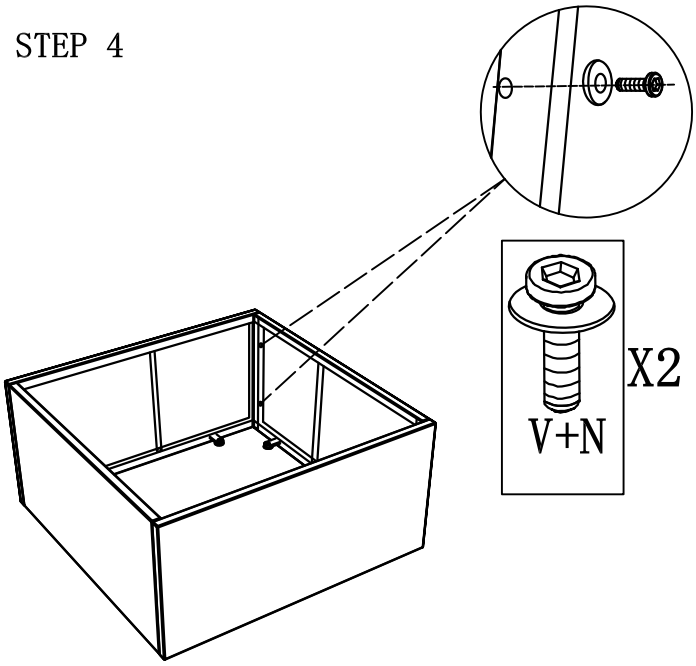

STEP 5

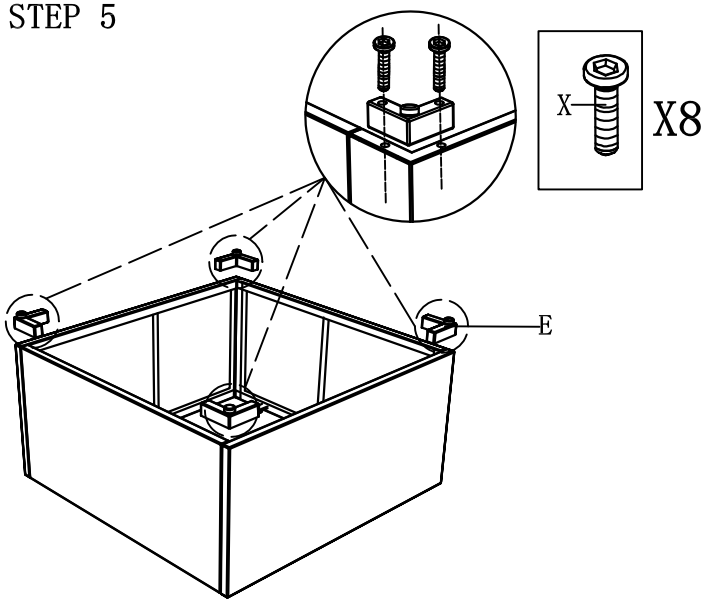

FINISH

