NE63T8711SS

SAMSUNG

Samsung Front Control Slide-in Electric Range with Smart Dial & Air Fry

6.3 cu. ft. Capacity

Signature Features

Smart Dial

- The new Smart Dial simplifies oven settings in a single dial and intuitively learns based on your cooking preferences.

Air Fry

- Cooking just got healthier* with new Air Fry mode. Using little to no oil, you can quickly prepare your favorite fried foods right in your oven. Air Fry tray included.

*As compared to deep frying.

Convection

- Powerful convection saves you time by cooking food fast and more evenly. Perfect for baking and roasting.

Available Colors

- Fingerprint Resistant Stainless Steel (shown)
- Fingerprint Resistant Black Stainless Steel
- Fingerprint Resistant Tuscan Stainless Steel

Smart Dial

Air Fry

Features

- Smart Dial
- Air Fry, Tray Included
- Convection
- Illuminated Knobs
- Fingerprint Resistant Finish
- 3600 W Express Boil™
- Large Oven Capacity – 6.3 cu. ft.
- Ready2Fit™ Guarantee
- Temperature Probe
- Storage Drawer
- Flexible Cooktop:
  Five Element Cooktop
  - One Triple Element (6"/9"/12")
  - One Double Element (6"/9")
  - Two Single Elements (6")
  - Warming Center

Convenience

- Wi-Fi Connectivity
- Voice-Enabled
- Convection Auto Conversion
- Self & Steam Clean
- Hidden Bake Element
- Child Safety Lock
- Delay Start
- Auto Oven Light
- Kitchen Timer
- Sabbath Mode

WiFi Bixby works with Google Assistant Ready2Fit™

NE63T8711SS

SAMSUNG

Samsung Front Control Slide-in Electric Range with Smart Dial & Air Fry

6.3 cu. ft. Capacity

Installation Specifications

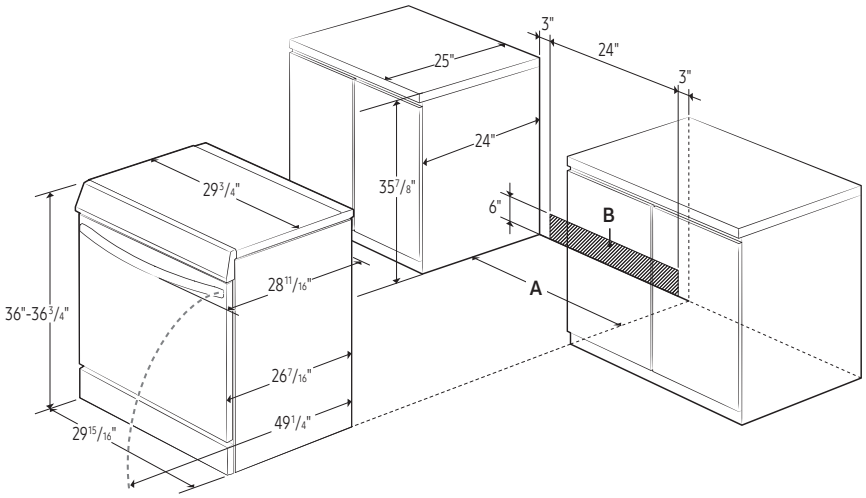

A: Cabinet opening min 30"
B: Acceptable electrical outlet area

IMPORTANT: If your cabinets are over 36¾" high, you must install this range on a hard, heat-resistant support that raises the surface of the range so that it is about even with the countertop.

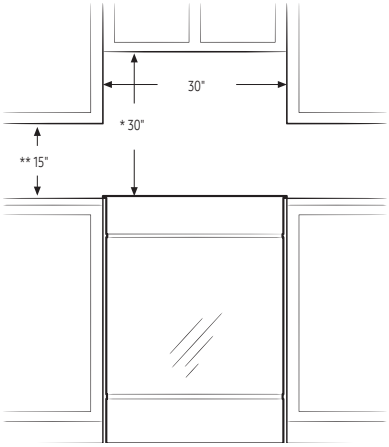

* 30" minimum clearance between the top of the cooking surface and the bottom of an unprotected wood or metal cabinet; or 24" minimum when the bottom of the wood or metal cabinet is protected by not less than ¼" of flame retardant millboard covered with not less than no.28 MSG sheet steel, 0.015" stainless steel, 0.024" aluminum, or 0.020" copper.

**15" minimum between the countertop and the adjacent cabinet bottom.

IMPORTANT: Consult with Installation Manual for detailed instructions before installing. All ranges must be installed with the Anti-Tip device that is included.

Power Source
240V/208V/60 Hz/40A

Electric Ceramic Cooktop
- Right Front: 6"/9"/12" Triple Element, 3000 W
- Left Front: 6"/9" Dual Element, 3600 W
- Right Rear: 6", 1200 W
- Left Rear: 6", 1200 W
- Center: 7" Warming Center

Oven
- Capacity: 6.3 cu. ft.
- Convection Element/Heater
- Convection Bake
- Convection Roast
- Bake
- Variable Broil: Low/High
- Air Fry
- Bread Proof
- Dehydrate

Warranty
One (1) Year Parts and Labor

Product Dimensions & Weight (WxHxD)
Oven Interior Dimensions:
24 13/16" x 22 7/16" x 19 3/4"

Outside Net Dimensions:
29 15/16" x 36-36 3/4" (Adjustable) x 28 11/16"

Weight: 175 lbs

Shipping Dimensions & Weight (WxHxD)
Dimensions:
33 1/16" x 41 3/4" x 30 5/16"

Weight: 201 lbs

Color	Model #	UPC Code
Fingerprint Resistant Stainless Steel	NE63T8711SS	887276409085
Fingerprint Resistant Black Stainless Steel	NE63T8711SG	887276409078
Fingerprint Resistant Tuscan Stainless Steel	NE63T8711ST	887276409092

ADA Compliant

Actual color may vary. Design, specifications, and color availability are subject to change without notice. Non-metric weights and measurements are approximate.

©2020 Samsung Electronics America, Inc. 85 Challenger Road, Ridgefield Park, NJ 07660. Tel: 800-SAMSUNG. samsung.com. Samsung is a registered trademark of Samsung Electronics Co. Ltd.