U-LINE

RIGHT PRODUCT. RIGHT PLACE. RIGHT TEMPERATURE. SINCE 1962.

Product Guide

Installed: 2224RGLINT

BREADTH OF LINE

Product Categories & Applications 4
Product Collection by Series 6
Temperature Management Systems 9

PRESERVATION: BEYOND REFRIGERATION

U-Select® Control Food & Beverage Modes 12
U-Select® Control Wine Modes 14
U-Select® Control Specialty Settings 15

INTEGRATION: BUILT-IN TO STAND OUT

Integration Matrix 19
Integrating U-Line Products into Cabinetry 21
Integrated Panel/Frame Guide 23

QUICK REFERENCE GUIDES

Wine Captain® Models 25
Beverage Centers 43
Clear Ice Machines 55
Crescent Ice Makers 61
Glass Door Refrigerators 65
Solid Door Refrigerators 77
Drawer Models 93
Freezers 99
Combo® Models 103
ADA Series 109
Outdoor Series 125
Marine Series 135

TECHNICAL DATA

Models at a Glance 148

Product Categories

Wine Captain®
Models

Beverage
Centers

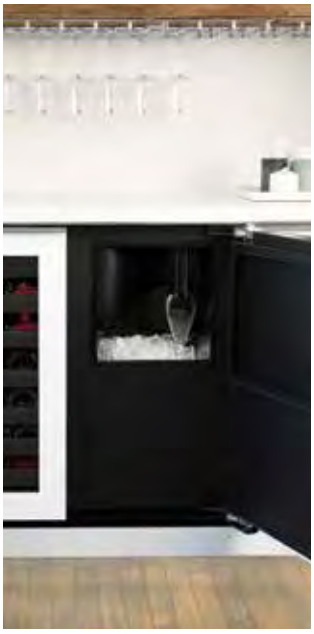

Clear Ice
Machines

Crescent Ice
Makers

Application Categories

Residential

Marine

Outdoor

Office/Boardroom

Glass & Solid Door Refrigerators

Drawer Models

Freezers

Combo® Models

Hospitality

Arena/Stadium

Product Collection by Series

Modular 3000 Series

The Modular 3000 Series is comprised of our ultra-premium product offering and is designed to provide the ultimate in point-of-use flexibility. These models are the most innovative, highly featured refrigeration and ice making products in the modular appliance industry. In addition to timeless design, the Modular 3000 Series models are equipped with our U-Select® Control, providing the ability to choose pre-programmed modes that properly preserve your food and beverages. Models seamlessly integrate into surrounding cabinetry and are available in the following finishes: Stainless or Integrated. The Modular 3000 Series spans seven product categories – Wine Captain® Models, Beverage Centers, Clear Ice Machines, Glass Door Refrigerators, Solid Door Refrigerators, Drawer Models, and Freezers.

Modular 3000 Series

2000 Series

The 2000 Series is comprised of our super-premium product offering and is designed to integrate beautifully into any application, while actively maintaining temperatures to ensure extended preservation of your food and beverages. Pristine lines, spacious interiors, and our Digital Touch Pad Control provide an elegant and universal aesthetic. The 2000 Series offers upscale features, advanced technology, and specialized product families. Models fully integrate into surrounding cabinetry and are available in the following finishes: Stainless or Integrated. The 2000 Series spans four product categories – Wine Captain® Models, Beverage Centers, Glass Door Refrigerators, and Solid Door Refrigerators.

2000 Series

1000 Series

The 1000 Series is comprised of our premium product offering, based on over fifty years of innovations, design patents, and world firsts. Now with a completely redesigned style including upgraded features and technology, it is the most diverse line in the industry. The 1000 Series features clean lines, elegant interior spaces, and offers either our Digital Touch Pad Control or Mechanical Dial Control. The 1000 Series offers more targeted priced products with impressive features. Models integrate into surrounding cabinetry and are available in the following finishes: Stainless, Integrated, Black, or White. The 1000 Series spans seven product categories – Wine Captain® Models, Beverage Centers, Clear Ice Machines, Crescent Ice Makers, Solid Door Refrigerators, Drawer Models, and Combo® Models.

1000 Series

ADA Series

ADA Series

The ADA Series is designed to install under the federally mandated requirement of a 34" high countertop. Controls are easily accessible and allow for single-hand operation. These models are a perfect solution where ADA height compliancy is required. Models are available in the following finishes: Stainless or Black. The ADA Series spans four product categories – Crescent Ice Makers, Glass Door Refrigerators, Solid Door Refrigerators, and Combo® Models.

Outdoor Series

Outdoor Series

Today's entertaining environments extend far beyond the boundaries of the traditional home. For over 50 years, our products have been used in outdoor applications and continue to be amongst our most popular models. Our outdoor models are fully wrapped in stainless steel to protect from harsh outdoor elements. These durable outdoor products are UL (Underwriters Laboratory) rated and deemed suitable for outdoor use. Models are available in the our Stainless finish. The Outdoor Series spans three product categories – Clear Ice Machines, Crescent Ice Makers, and Solid Door Refrigerators.

Marine Series

Marine Series

We take ice making and refrigeration to yet another environment, the sea. Our Marine Series feature durability and aesthetics, as well as exceptional ice production and refrigeration capacity, for use above and below deck. Corrosive-resistant, stainless steel hinges and fasteners on the UV resistant cabinet and doors, combine maximum convenience with durability and good looks. Models are available in the following finishes: Stainless, Black, or White. The Marine Series spans two product categories – Crescent Ice Makers and Combo® Models.

Installed: 2218RINT

Temperature Management Systems

U-Select® Control | Modular 3000 Series

Convection Cooling System

All Modular 3000 Series are equipped with our U-Select® Control, offering an OLED display which is ergonomically located on top of the door for convenient control. Equipped with 5 food & beverage modes, 3 wine modes, and 3 specialty settings, all preprogrammed to achieve optimal performance.

Digital Touch Pad Control | 2000 Series

Convection Cooling System

All 2000 Series are equipped with our color coordinated Digital Touch Pad Control, which is conveniently located on the face of each model and offers an intuitive display, making it quick and simple to control your unit.

Digital Touch Pad Control | 1000 Series

Passive Cooling System

All 1000 Series are equipped with our color coordinated Digital Touch Pad Control*, which is conveniently located on the face of each model and offers an intuitive display, making it quick and simple to control your unit.

* Few select 1000 Series models offer a mechanical control.

Installed: 3036RRINT

Temperature Stability

Widest Temperature Settings

UV Protection

Preservation: Beyond Refrigeration

We are committed to providing premium modular refrigeration and implement a variety of technologies to ensure extended preservation of your food and beverages. Most models ensure temperature stability by maintaining temperature within 1°F of the set point. We offer the widest temperature offering in the industry. Our glass door models feature LowE coated, argon gas filled thermopane glass to protect contents from harmful UV light.

Most of our 1000 and 2000 Series models offer our Digital Touch Pad control, which provides an intuitive display for quick and simple control. The Modular 3000 Series makes it easier than ever before to preserve your food and beverages. Equipped with the U-Select® Control, our Modular 3000 Series puts the control in your hands, giving you the ability to choose settings that correspond to the types of foods and beverages you preserve. Foods stay fresher longer and taste better when kept at a stable and optimal temperature. Either select pre-programmed optimal preservation modes for specific types of food and beverages, or manually adjust temperatures based on your preference.

Preservation: Beyond Refrigeration

U-Select® Control Food & Beverage Modes

Modular 3000 Series

Deli

Mode Range: 34°F - 40°F
Set point: 36°F

Perfect for: Meat, fish, poultry, butter or other dairy items, garlic, oils, nuts, and condiments.

Recreate the ideal showcase conditions of a fine, neighborhood deli with the Deli Mode. Cheeses, condiments, lunchmeats and other delicacies stay fresh and last longer when preserved properly.

Market

Mode Range: 34°F - 40°F
Set point: 38°F

Perfect for: Fruits, vegetables, berries, and leafy greens.

Whether you like to keep fresh-picked strawberries on hand, or an entire summer salad ready to serve at a moment's notice, the Market Mode is the ideal choice for your fresh fruits and veggies.

Root Cellar

Mode Range: 45°F - 55°F
Set point: 50°F

Perfect for: Root vegetables, potatoes, onions, lemons, limes, melons, peppers, and beans.

Rural homeowners in years past knew that farm-fresh produce was best kept in cool, dark root cellars. U-Line has recreated those ideal conditions with the Root Cellar Mode, a setting that maintains crispness and preserves freshness without getting too cool.

Pantry

Mode Range: 34°F - 70°F
Set point: 42°F

Perfect for: Dry goods, baking ingredients, spices and seasonings.

Factors like unstable temperature, light, bugs, and moisture all affect the extended preservation of your dry goods. Many dry goods can be purchased in bulk, which makes it that much more important to store them properly. Pantry mode extends the life of your dry goods like flour, seasonings, and grains by offering an environment that maintains a stable temperature and ideal moisture level.

Beverage

Mode Range: 34°F - 65°F
Set point: 38°F

Perfect for: Perfectly chilled for all types of beverages.

Soft drinks, juices, beer and wine are at their best when chilled, yet you may prefer some items colder than others. Whatever your "perfect" temperature is, our Beverage Mode lets you set—and keep—your refreshments just right.

Polar

Mode Range: -5°F - 5°F
Set point: 0° F

Perfect for: Ice cream, popsicles, frozen meals, meats, desserts, fruits, vegetables.

Polar Mode quickly sets your freezer to the ideal temperature to ensure your everyday frozen goods, like ice cream, are preserved to perfection without a trace of freezer burn.

Preservation: Beyond Refrigeration

U-Select® Control Wine Modes

Modular 3000 Series

Sparkling Wine

Mode Range: 38°F - 50°F
Set point: 45°F

Perfect for: Sparkling wines, sweet whites and dessert wines.

Champagne, Prosecco, Cuvée, and other sparkling wines are best stored at a low temperature. Yet, chill wines too cold, and they lose their flavor and balance. Use our Sparkling Wine mode to extend the preservation of the bottles you treasure.

White Wine

Mode Range: 45°F - 55°F
Set point: 50°F

Perfect for: All white wine varietals.

You may choose to preserve fuller-bodied or oaked white wines at about 50°F degrees, whereas medium to light-bodied whites may be better kept at a slightly lower 45°F - 50°F. No matter your preference, the White Wine mode ensures your next glass of wine is perfectly cool and crisp.

Red Wine

Mode Range: 55°F - 65°F
Set point: 55°F

Perfect for: All red wine varietals.

Whether your tastes skew in favor of full-bodied intense reds, medium-bodied reds, or more toward the lighter fruity red wines, use the Red Wine mode to ensure you retain the delicious fullness of these selections.

U-Select® Control Specialty Settings

Modular 3000 Series

Quick Chill

Just bought a room temperature pack of beer or soda and your guests are arriving soon?
No worries when your unit is equipped with the Quick Chill setting. The Quick Chill setting can be used to rapidly chill your contents to the lowest temperature in each mode for a designated period of time.

Sabbath

Various U-Line models are Star-K certified and offer a Sabbath setting. The Sabbath setting disables system responses to user initiated activities and all external functions; including lighting, display and audible alarms. The unit will continue to maintain its internal set temperature while in Sabbath setting. View a full list of Star-K certified U-Line units at www.star-k.org.

Energy Saver

Energy efficiency is a priority when designing U-Line models. The Energy Saver setting reduces the amount of energy the unit consumes. U-Line has the largest energy efficient undercounter offering in the industry.

Installed: 36” Custom Model (3018WCINT & 3018CLRINT with Ice Flange Kit)

Seamlessly Integrated
Modular 3000 Series

Fully Integrated
2000 Series

Integrated
1000 Series

Integration: Built-In to Stand Out

Our modular refrigeration provides the best premium design aesthetic and the most function by offering varying levels of integration, lighting, and installation application options. Designed and engineered in America, but built for the world, our products integrate into a standard 24" cabinet depth and are offered in the following standard widths: 15", 18", 24", and 36".

Our front ventilation system is engineered to circumvent the need for additional airflow, providing the flexibility to integrate and install our products undercounter, in island applications, or wherever you need them most. All integrated models maintain zero clearance, ensuring performance and hinge clearance with the panel/frame installed.

Integrated finishes are offered in most models through each of our series: 1000, 2000, and Modular 3000 Series, allowing for installation of a ¾"custom overlay panel/frame of your choice; no kits or accessories needed. All integrated models offer black interiors that essentially disappear into your cabinetry, ensuring an elegant installation. Our 2000 Series and Modular 3000 Series grilles can accept a custom overlay toe-kick; or can accept a continuous custom toe-kick that extends the full cabinet length to create a design that seamlessly integrates with your surrounding cabinetry.

Integration Matrix

Doors

Seamlessly Integrated
Modular 3000 Series

Seamlessly integrates into virtually any environment and are available in 18″, 24″, and 36″ cabinet widths. All integrated models maintain zero clearance, ensuring performance and hinge clearance from adjacent cabinets with the panel/frame installed.

All models are offered in our integrated finish, allowing for installation of a ¾" custom overlay panel/frame of your choice; no kits or accessories needed. Standard door opening is 115°. Door pin is included and offers a 90° stop, providing accessibility for models that need to be installed adjacent to cabinets or walls. Doors are designed for fine tuning, ensuring a seamless installation.

Fully Integrated
2000 Series

Fully integrates into virtually any environment and are available in 18″ and 24″ cabinet widths. All integrated models maintain zero clearance, ensuring performance and hinge clearance from adjacent cabinets with the panel/frame installed.

All models are offered in our integrated finish, allowing for installation of a ¾" custom overlay panel/frame of your choice; no kits or accessories needed. Standard door opening is 115°. Door pin is included and offers a 90° stop, providing accessibility for models that need to be installed adjacent to a wall. Doors are designed for fine tuning, ensuring a fully integrated installation.

Integrated
1000 Series

Integrates into various environments and are available in 15″ and 24″ cabinet widths. All integrated models can be installed to ensure performance and hinge clearance with the panel/frame installed.

Many models are offered in our integrated finish, allowing for installation of a ¾" custom overlay panel/frame of your choice; no kits or accessories needed. Door pin is included and offers a 90° stop, ensuring that models do not come in contact with adjacent cabinets or walls.

Hinges

Robust, concealed and covered articulating hinges provide a minimalist aesthetic. Built-in door stop and closer ensure doors always close. Models must be ordered hinge specific.

Robust, concealed and covered articulating hinges provide a minimalist aesthetic. Built-in door stop and closer ensure doors always close. Models must be ordered hinge specific.

Low-profile, reversible pivot hinges provide flexibility during installation as the door can easily be reversed in the field.

Grille

Adjustable grille allows for front ventilation, ensuring your model can be installed in a variety of applications, including islands. Grilles can be shifted front-to-back and up-and-down to ensure alignment with adjacent cabinetry toe-kicks. Grilles can accept a custom overlay toe-kick; or run your continuous custom overlay toe-kick that extends the full cabinet length to create a design that seamlessly integrates with your surrounding cabinetry.

Fixed grille allows for front ventilation, ensuring your model can be installed in a variety of applications, including islands. Grille can accept a custom overlay toe-kick, creating a design that fully integrates with your surrounding cabinetry. If your model's toe-kick aligns with adjacent cabinetry toe-kicks, grilles can accept a continuous custom overlay toe-kick that extends the full cabinet length to create a design that fully integrates with your surrounding cabinetry.

Fixed grille allows for front ventilation, ensuring your model can be installed in a variety of applications, including islands.

Leveling Legs

Four independently adjustable leveling legs provide a precise undercounter fit. Rear legs are accessible and adjustable from the front for ease of installation. Models offer a 1" range of height flexibility, reducing installation time and ensuring a seamlessly integrated fit.

Four independently adjustable leveling legs provide a precise undercounter fit. Models offer a 1" range of height flexibility, ensuring a fully integrated fit.

Four independently adjustable leveling legs provide a precise undercounter fit. Models offer a 1" range of height flexibility, ensuring an integrated fit.

Cabinet Styles

Inset

24″ deep base cabinet with doors and drawers that close within the frame structure and are flush with the face of the frame. The overall depth from the front of the cabinet door or drawer to the back of the base cabinet is 24″ deep.

Overlay / Face Frame

24″ deep base cabinet with a face frame structure that supports doors and drawers that close onto the face of the frame. The overall depth from the front of the cabinet door or drawer to the back of the base cabinet is approximately 24 ¾″ deep.

European / Frameless

24″ deep base cabinet with no visible frame structure on the outer face of the cabinet. Doors and drawers fully cover the face frame area of cabinet case and have minimal reveals or gaps between doors and drawers. The overall depth from the front of the cabinet door or drawer to the back of the base cabinet is 24 ¾″ deep.

Inset

Overlay / Face Frame

European / Frameless

Integrating U-Line Products into Cabinetry

Create the kitchen of your dreams by integrating your U-Line models into your cabinetry with custom overlay panels/frames. We provide the simplest and most effective way to create a clean integrated look, allowing you to effortlessly blend your appliance into your surrounding cabinetry. We offer the widest selection of integrated models in the industry. All Modular 3000 Series and 2000 Series models, and most of our 1000 Series models, accept a ¾" integrated panel/frame. All integrated models are delivered ready for panel/frame installation, no kits or accessories needed.

Full ¾" custom overlay panels/frames apply to solid door, glass door, and drawer models. All integrated models maintain zero clearance installation, ensuring performance and hinge clearance with the panel/frame installed. Additionally, grilles on our Modular 3000 Series and 2000 Series can accept custom overlay toe-kicks. The images to the left show samples of various cabinetry styles your U-Line models can be integrated into. For further integration details, view the Integrated Panel Guide on the following page, or visit u-line.com and view the User Guides for all our models.

Installed: 3024BEVINT

Integrated Panel Guide

PRODUCT CATEGORY	SERIES	MODEL	OVERLAY / FACE FRAME	INSET	EUROPEAN / FRAMLESS
Wine Captain® Models	Modular 3000 Series	3018WCINT	●	●	●
		3024ZWCINT	●	●	●
		3036WCWCINT	●	●	●
	2000 Series	2218WCINT	●	●	●
		2224ZWCINT	●	●	●
	1000 Series	1215WCINT	●	●	●
		1224WCINT	●	●	●
Beverage Centers	Modular 3000 Series	3024BEVINT	●	●	●
		3036BVWCINT	●	●	●
	2000 Series	2224BEVINT	●	●	●
	1000 Series	1224BEVINT	●	●	●
Clear Ice Machines	Modular 3000 Series	3018CLRINT	●	●	●
	1000 Series	CLR1215INT	●	*	●
Crescent Ice Makers	1000 Series	BI1215INT	●	*	●
Glass Door Refrigerators	Modular 3000 Series	3018RGLINT	●	●	●
		3024RGLINT	●	●	●
		3036RRGLINT	●	●	●
	2000 Series	2218RGLINT	●	●	●
		2224RGLINT	●	●	●
Solid Door Refrigerators	Modular 3000 Series	3018RINT	●	●	●
		3024RINT	●	●	●
		3036RRINT	●	●	●
	2000 Series	2218RINT	●	●	●
		2224RINT	●	●	●
	1000 Series	1215RINT	●	●	●
		1224RINT	●	●	●
Drawer Models	Modular 3000 Series	3024DWRINT	●	●	●
	1000 Series	1224DWRINT	●	●	●
Freezers	Modular 3000 Series	3024FZRINT	●	●	●
Combo® Models	1000 Series	CO1224FINT	●	*	●
		1224RFINT	●	●	●

* These units require extra depth for water connections to install into a 24” deep inset cabinet. To accommodate, we recommend cabinet depth be adjusted and furred out. View the User Guides for complete installation details at u-line.com.

Installed: 3018WCINT

Wine Captain® Models

	1024WC	1215WC	1224WC	2218WC	2224ZWC	3018WC	3024ZWC	3036WCWC
	1000 Series			2000 Series		3000 Series		
Capacity: Wine Bottle (750 ml)	48	24	48	31	43	31	43	62
Capacity: Volume (cu ft)	5.2	2.9	5.2	3.6	4.7	3.6	4.7	7.0
Control Type	Mechanical Dial	Digital Touch Pad	Digital Touch Pad	Digital Touch Pad	Digital Touch Pad	U-Select®	U-Select®	U-Select®
Dimensions: Product Depth	23 ¼" / 591 mm	23 ¼" / 591 mm	23 ¼" / 591 mm	23 7/16" / 590 mm	23 7/16" / 590 mm	23 7/16" / 590 mm	23 7/16" / 590 mm	23 7/16" / 590 mm
Dimensions: Product Height	34 ⅛" / 867 mm	34 ⅛" / 867 mm	34 ⅛" / 867 mm	33 11/16" / 856 mm	33 11/16" / 856 mm	33 11/16" / 856 mm	33 11/16" / 856 mm	33 11/16" / 856 mm
Dimensions: Product Width	24" / 610 mm*	14 15/16" / 379 mm*	24" / 610 mm*	17 ¾" / 450 mm	23 ⅝" / 600 mm	17 ¾" / 450 mm	23 ⅝" / 600 mm	35 7/16" / 900 mm
Door Swing	Field Reversible	Field Reversible	Field Reversible	Right or Left	Right or Left	Right or Left	Right or Left	Double Doors
Energy Consumption: Avg. Per Year	250 kWh	250 kWh	250 kWh	250 kWh	250 kWh	250 kWh	250 kWh	250 kWh
ENERGY STAR	na	na	na	na	na	na	na	na
Finishes	Stainless	Stainless Integrated Black	Stainless Integrated Black	Stainless Integrated	Stainless Integrated	Stainless Integrated	Stainless Integrated	Stainless Integrated
Lock Model Available	No	No	Yes	No	Yes	Yes	Yes	Yes
Sabbath (Star K Certified)	No	Yes	Yes	Yes	Yes	Yes	Yes	Yes
Temperature Range	40°F - 60°F	38°F - 65°F	38°F - 65°F	38°F - 65°F	34°F - 65°F	38°F - 65°F	34°F - 65°F	38°F - 65°F
UL Listing	Residential	Residential / Commercial	Residential / Commercial	Residential	Residential	Residential	Residential	Residential

*The cutout requires an additional ¼" width overall to ensure proper installation.

1024WC

24” Wine Captain® Model • 1000 Series

STAINLESS FRAME

FEATURES & BENEFITS

PERFORMANCE	• Volume of 5.2 cu ft holds up to 48 wine bottles (750 ml) • Mechanical Dial Control is conveniently located on the grille • Temperature range: 40°F - 60°F • Mechanical passive cooling system • Relative humidity inside the unit is approx. 50% • Rubber mounted compressor virtually eliminates vibration
INTERIOR/EXTERIOR	• White interior is illuminated with recessed incandescent lighting that automatically turns off when the door is closed • Three-quarter extension zinc coated wine racks allow for easy access • Wine racks accommodate a variety of bottle shapes and sizes, while the fourth and fifth racks allow for larger diameter wine and champagne bottles • LowE coated, argon gas filled thermopane glass door provides protection from harmful UV light • Standard commercial stainless steel handle is interchangeable with professional handle accessory • Door swing is field reversible
INTEGRATION	• Unit is designed to be built-in or can be freestanding with the freestanding accessory kit • Solid natural beech wood fronts on wine racks can easily be stained to match surrounding cabinetry • Four independently adjustable leveling legs provide a precise undercounter fit

MODEL DETAILS

Model	Voltage	Door Swing	Finish	Shipping Weight
U-1024WCS-00A	115	Field Reversible	Stainless Frame	133 lbs

ACCESSORIES

Model	Description	Finish	Shipping Weight
23054	Professional Door Handle, 1 ¼” Diameter	Stainless	2 lbs
U-FSK-B	Freestanding Kit	Black	3 lbs

DIMENSIONS

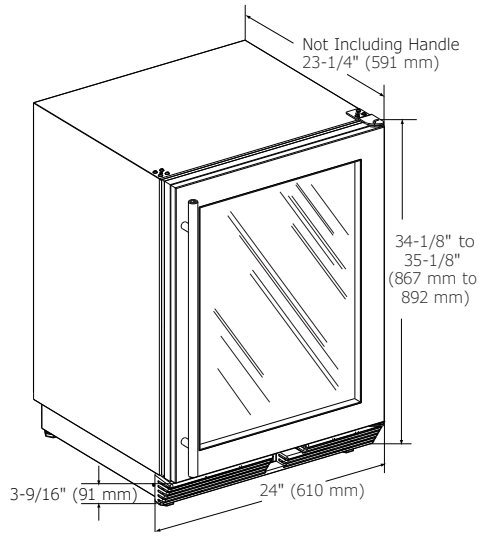

CABINET CUT-OUT

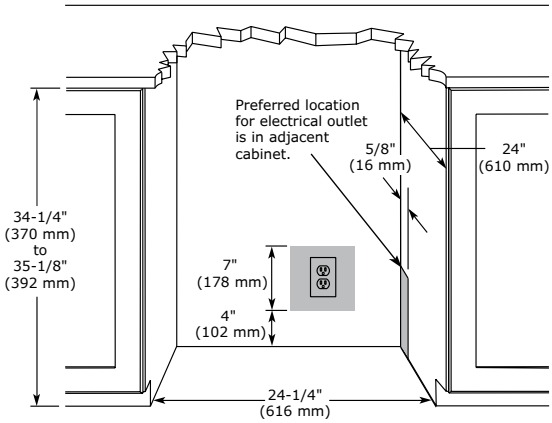

INSTALLATION NOTES

When installing adjacent to wall, ensure 2 ½” clearance on hinged side for 90° door opening, allowing ample room for door handle.
Cutout includes the additional ¼” width overall to ensure proper installation.
No additional clearance around sides, top or rear of unit is needed for ventilation.
Do not obstruct front grille air flow.

SPECIFICATIONS

Model	1024WC
Amps: Running	2.4
Capacity: Volume (cu ft)	5.2
Capacity: Wine Bottle (750 ml)	48
Control Type	Mechanical Dial
Dimensions: Product Depth	23 ¼" / 591 mm
Dimensions: Product Height	34 ⅛" / 867 mm
Dimensions: Product Width	24" / 610 mm
Energy Consumption: Avg. Per Year	250 kWh
ENERGY STAR	na
Product Weight: Max	123 lbs
Refrigerant Type	R134a
Sabbath (Star K Certified)	No
Temperature Range	40°F - 60°F

COOLING SYSTEM

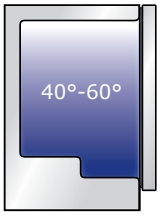

ELECTRICAL REQUIREMENTS

This unit requires a grounded a polarized 115 VAC, 60 Hz, 15 A power supply (normal household current).

Residential

Please visit u-line.com to view this model’s User Guide.
All specifications are subject to change without notice.

1215WC

15” Wine Captain® Model • 1000 Series

STAINLESS FRAME

INTEGRATED FRAME

BLACK FRAME

FEATURES & BENEFITS

PERFORMANCE	• Volume of 2.9 cu ft holds up to 24 wine bottles (750 ml) • Digital Touch Pad Control is conveniently located on upper face of unit • Temperature range: 38°F - 65°F • Digital passive cooling system • Maintains temperature to within 1°F of the set point to maximize preservation • Relative humidity inside the unit is approx. 50% • Rubber mounted compressor virtually eliminates vibration
INTERIOR/EXTERIOR	• Black interior is illuminated with LED lighting that automatically turns off when the door is closed, or can be set to stay on for 3 hours • Three-quarter extension black vinyl wine racks with natural beech wood fronts allow for easy access and prevent bottles from shifting • Wine racks accommodate a variety of bottle shapes and sizes, while the fourth and fifth racks allow for larger diameter wine and champagne bottles • LowE coated, argon gas filled thermopane glass door provides protection from harmful UV light • Standard commercial stainless steel handle is interchangeable with professional handle accessory • Door swing is field reversible
INTEGRATION	• Unit is designed to be built-in or can be freestanding • Solid natural beech wood fronts on wine racks can easily be stained to match surrounding cabinetry • Integrated model requires ¾” custom door panel • Four independently adjustable leveling legs provide a precise undercounter fit • Available in the following finishes: Stainless, Integrated, or Black

MODEL DETAILS

Model	Voltage	Door Swing	Finish	Shipping Weight
U-1215WCS-00A	115	Field Reversible	Stainless Frame	102 lbs
U-1215WCINT-00A	115	Field Reversible	Integrated Frame	99 lbs
U-1215WCB-00A	115	Field Reversible	Black Frame	102 lbs

ACCESSORIES

Model	Description	Finish	Shipping Weight
23054	Professional Door Handle, 1 ¼” Diameter	Stainless	2 lbs

DIMENSIONS

Dimensions shown apply to all finishes, including Integrated (INT) models with ¾” overlay panel/frame installed.

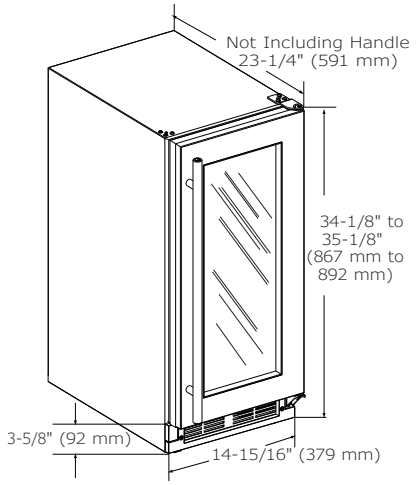

CABINET CUT-OUT

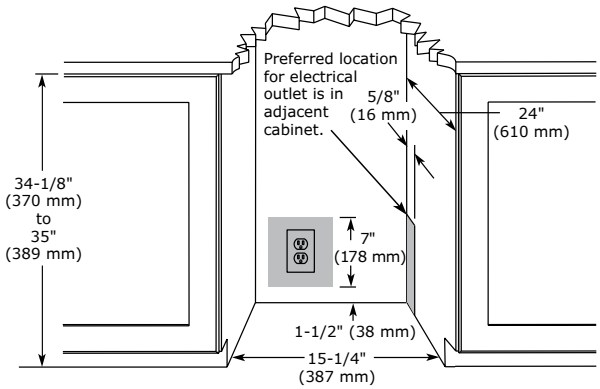

SPECIFICATIONS

Model	1215WC
Amps: Running	1.2
Capacity: Volume (cu ft)	2.9
Capacity: Wine Bottle (750 ml)	24
Control Type	Digital Touch Pad
Dimensions: Product Depth	23 ¼" / 591 mm
Dimensions: Product Height	34 ⅛" / 867 mm
Dimensions: Product Width	14 15⁄16" / 379 mm
Energy Consumption: Avg. Per Year	250 kWh
ENERGY STAR	na
Product Weight: Max	95 lbs
Refrigerant Type	R600a
Sabbath (Star K Certified)	Yes
Temperature Range	38°F - 65°F

INSTALLATION NOTES

When installing adjacent to wall, ensure 2 ½” clearance on hinged side for 90° door opening
Cutout includes the additional ¼” width overall to ensure proper installation.
No additional clearance around sides, top or rear of unit is needed for ventilation.
Do not obstruct front grille air flow.

COOLING SYSTEM

ELECTRICAL REQUIREMENTS

This unit requires a grounded a polarized 115 VAC, 60 Hz, 15 A power supply (normal household current).

Residential & Commercial

Please visit u-line.com to view this model’s User Guide.
All specifications are subject to change without notice.

1224WC

24” Wine Captain® Model • 1000 Series

STAINLESS FRAME

STAINLESS FRAME (LOCK)

INTEGRATED FRAME

INTEGRATED SOLID

BLACK FRAME

FEATURES & BENEFITS

PERFORMANCE	• Volume of 5.2 cu ft holds up to 48 wine bottles (750 ml) • Digital Touch Pad Control is conveniently located on upper face of unit • Temperature range: 38°F - 65°F • Digital passive cooling system • Maintains temperature to within 1°F of the set point to maximize preservation • Relative humidity inside the unit is approx. 50% • Rubber mounted compressor virtually eliminates vibration
INTERIOR/EXTERIOR	• Black interior is illuminated with LED lighting that automatically turns off when the door is closed, or can be set to stay on for 3 hours • Three-quarter extension black vinyl coated wine racks allow for easy access and prevent bottles from shifting • Wine racks accommodate a variety of bottle shapes and sizes, while the fourth and fifth racks allow for larger diameter wine and champagne bottles • LowE coated, argon gas filled thermopane glass door provides protection from harmful UV light • Standard commercial stainless steel handle is interchangeable with professional handle accessory • Door swing is field reversible
INTEGRATION	• Unit is designed to be built-in or can be freestanding with additional accessory kit • Solid natural beech wood fronts on wine racks can easily be stained to match surrounding cabinetry • Integrated model requires ¾” custom door panel • Four independently adjustable leveling legs provide a precise undercounter fit • Available in the following finishes: Stainless, Integrated, or Black

MODEL DETAILS

Model	Voltage	Door Swing	Finish	Shipping Weight
U-1224WCS-00A	115	Field Reversible	Stainless Frame	133 lbs
U-1224WCS-13A	115	Field Reversible	Stainless Frame (Lock)	133 lbs
U-1224WCINT-00A	115	Field Reversible	Integrated Frame	130 lbs
U-1224WCINT-60A	115	Field Reversible	Integrated Solid	123 lbs
U-1224WCB-00A	115	Field Reversible	Black Frame	133 lbs

ACCESSORIES

Model	Description	Finish	Shipping Weight
23054	Professional Door Handle, 1 ¼” Diameter	Stainless	2 lbs
U-FSK-B	Freestanding Kit	Black	3 lbs

DIMENSIONS

Dimensions shown apply to all finishes, including Integrated (INT) models with ¾” overlay panel/frame installed.

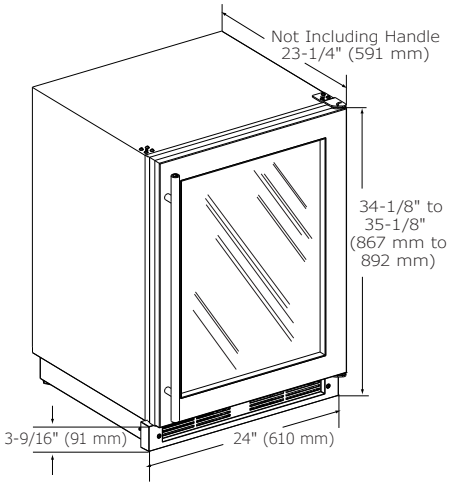

CABINET CUT-OUT

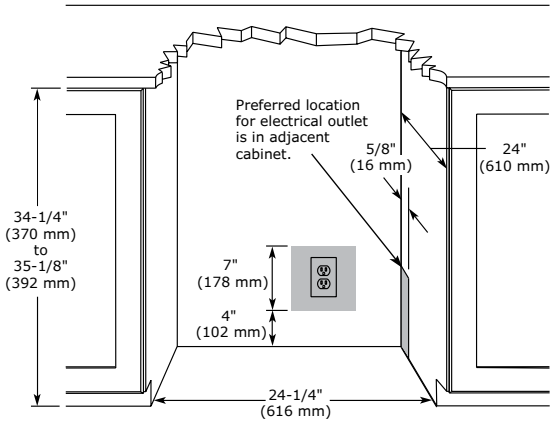

INSTALLATION NOTES

When installing adjacent to wall, ensure 2 ½” clearance on hinged side for 90° door opening, allowing ample room for door handle.
Cutout includes the additional ¼” width overall to ensure proper installation.
No additional clearance around sides, top or rear of unit is needed for ventilation.
Do not obstruct front grille air flow.

SPECIFICATIONS

Model	1224WC
Amps: Running	1.2
Capacity: Average Volume (cu ft)	5.2
Capacity: Wine Bottle (750 ml)	48
Control Type	Digital Touch Pad
Dimensions: Product Depth	23 ¼" / 591 mm
Dimensions: Product Height	34 ⅛" / 867 mm
Dimensions: Product Width	24" / 610 mm
Energy Consumption: Avg. Per Year	250 kWh
ENERGY STAR	na
Product Weight: Max	123 lbs
Refrigerant Type	R600a
Sabbath (Star K Certified)	Yes
Temperature Range	38°F - 65°F

COOLING SYSTEM

ELECTRICAL REQUIREMENTS

This unit requires a grounded a polarized 115 VAC, 60 Hz, 15 A power supply (normal household current).

Residential & Commercial

Please visit u-line.com to view this model’s User Guide.
All specifications are subject to change without notice.

2218WC

18” Wine Captain® Model • 2000 Series

STAINLESS FRAME

INTEGRATED FRAME

FEATURES & BENEFITS

PERFORMANCE	• Volume of 3.6 cu ft holds up to 31 wine bottles (750 ml) • Digital Touch Pad Control is conveniently located on upper face of unit • Temperature range: 38°F - 65°F • Convection cooling system rapidly and efficiently takes items to the set temperature • Maintains temperature to within 1°F of the set point to maximize preservation • Relative humidity inside the unit is approx. 50% • Rubber mounted compressor virtually eliminates vibration
INTERIOR/EXTERIOR	• Black interior is illuminated with LED lighting that automatically turns off when the door is closed, or can be set to stay on for 3 hours • Full extension black vinyl coated wine racks allow for easy access and prevent bottles from shifting • Wine racks accommodate a variety of bottle shapes and sizes, while the third and sixth racks allow for larger diameter wine and champagne bottles • LowE coated, argon gas filled thermopane glass door provides protection from harmful UV light • Standard commercial stainless steel handle is interchangeable with professional handle accessory • Must be ordered right-hand or left-hand hinged
INTEGRATION	• Solid natural beech wood fronts on wine racks can easily be stained to match surrounding cabinetry • Robust, concealed and covered hinges with built-in door stop and closer • Integrated model requires ¾” custom door panel • Fixed grille can accept an overlay toe-kick • Four independently adjustable leveling legs provide a precise undercounter fit

MODEL DETAILS

Model	Voltage	Door Swing	Finish	Shipping Weight
U-2218WCS-00A	115	Right-Hand Hinge	Stainless Frame	134 lbs
U-2218WCS-01A	115	Left-Hand Hinge	Stainless Frame	134 lbs
U-2218WCINT-00A	115	Right-Hand Hinge	Integrated Frame	132 lbs
U-2218WCINT-01A	115	Left-Hand Hinge	Integrated Frame	132 lbs

ACCESSORIES

Model	Description	Finish	Shipping Weight
23054	Professional Door Handle, 1 ¼” Diameter	Stainless	2 lbs

2218WC

2000 Series • 18” Wine Captain® Model

DIMENSIONS

Dimensions shown apply to all finishes, including Integrated (INT) models with ¾” overlay panel/frame installed.

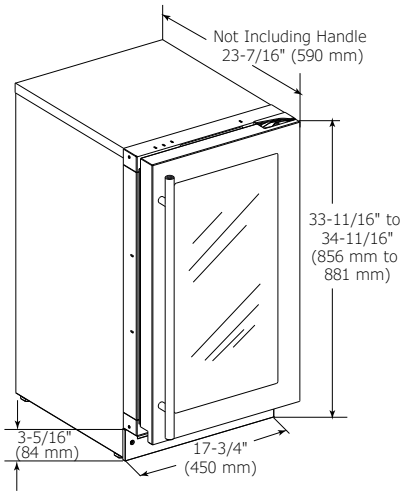

CABINET CUT-OUT

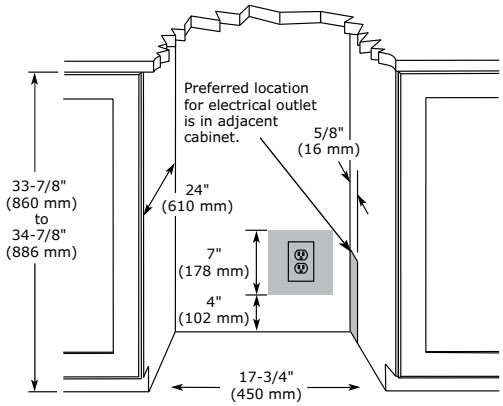

INSTALLATION NOTES

When installing adjacent to wall, ensure 2 ½” clearance on hinged side for 90° door opening, allowing ample room for door handle.
No additional clearance around sides, top or rear of unit is needed for ventilation.
Do not obstruct front grille air flow.

SPECIFICATIONS

Model	2218WC
Amps: Running	1.2
Capacity: Average Volume (cu ft)	3.6
Capacity: Wine Bottle (750 ml)	31
Control Type	Digital Touch Pad
Dimensions: Product Depth	23 7⁄16" / 590 mm
Dimensions: Product Height	33 11⁄16" / 856 mm
Dimensions: Product Width	17 ¾" / 450 mm
Energy Consumption: Avg. Per Year	250 kWh
ENERGY STAR	na
Product Weight: Max	125 lbs
Refrigerant Type	R600a
Sabbath (Star K Certified)	Yes
Temperature Range	38°F - 65°F

COOLING SYSTEM

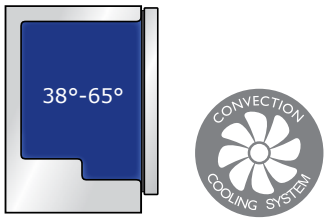

ELECTRICAL REQUIREMENTS

This unit requires a grounded a polarized 115 VAC, 60 Hz, 15 A power supply (normal household current).

Residential

Please visit u-line.com to view this model’s User Guide.
All specifications are subject to change without notice.

2224ZWC

24” Wine Captain® Model • 2000 Series

STAINLESS FRAME

STAINLESS FRAME (LOCK)

INTEGRATED FRAME

INTEGRATED SOLID

FEATURES & BENEFITS

PERFORMANCE	• Volume of 4.7 cu ft holds up to 43 wine bottles (750 ml) • Digital Touch Pad Control is conveniently located on upper face of unit • Temperature range: 34°F - 65°F • Digital passive cooling system • Maintains temperature to within 1°F of the set point to maximize preservation • Independently controlled dual-zones • Relative humidity inside the unit is approx. 50% • Rubber mounted compressor virtually eliminates vibration
INTERIOR/EXTERIOR	• Black interior is illuminated with LED lighting that automatically turns off when the door is closed, or can be set to stay on for 3 hours • Full extension black vinyl coated wine racks allow for easy access and prevent bottles from shifting • Wine racks accommodate a variety of bottle shapes and sizes, while the third and sixth racks allow for larger diameter wine and champagne bottles • LowE coated, argon gas filled thermopane glass door provides protection from harmful UV light • Standard commercial stainless steel handle is interchangeable with professional handle accessory • Must be ordered right-hand or left-hand hinged • Door lock model available
INTEGRATION	• Solid natural beech wood fronts on wine racks can easily be stained to match surrounding cabinetry • Robust, concealed and covered hinges with built-in door stop and closer • Integrated model requires ¾” custom door panel • Fixed grille can accept an overlay toe-kick • Four independently adjustable leveling legs provide a precise undercounter fit

MODEL DETAILS

Model	Voltage	Door Swing	Finish	Shipping Weight
U-2224ZWCS-00A	115	Right-Hand Hinge	Stainless Frame	160 lbs
U-2224ZWCS-01A	115	Left-Hand Hinge	Stainless Frame	160 lbs
U-2224ZWCS-13A	115	Right-Hand Hinge	Stainless Frame (Lock)	160 lbs
U-2224ZWCS-15A	115	Left-Hand Hinge	Stainless Frame (Lock)	160 lbs
U-2224ZWCINT-00A	115	Right-Hand Hinge	Integrated Frame	157 lbs
U-2224ZWCINT-01A	115	Left-Hand Hinge	Integrated Frame	157 lbs
U-2224ZWCINT-60A	115	Right-Hand Hinge	Integrated Solid	150 lbs
U-2224ZWCINT-61A	115	Left-Hand Hinge	Integrated Solid	150 lbs

ACCESSORIES

Model	Description	Finish	Shipping Weight
23054	Professional Door Handle, 1 ¼” Diameter	Stainless	2 lbs

DIMENSIONS

Dimensions shown apply to all finishes, including Integrated (INT) models with ¾” overlay panel/frame installed.

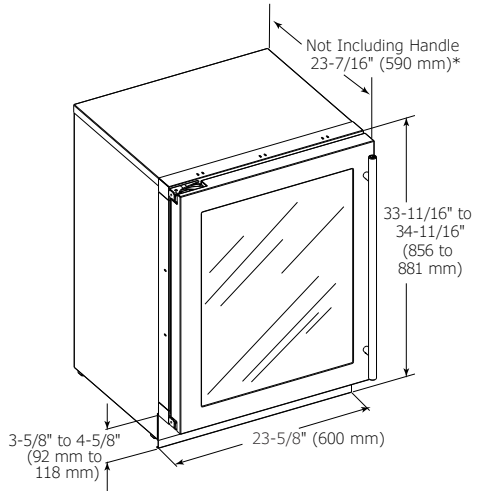

CABINET CUT-OUT

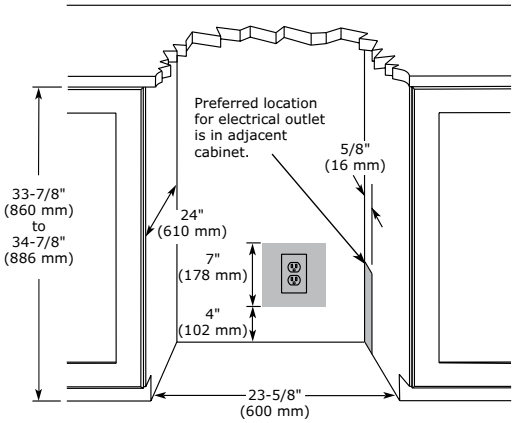

INSTALLATION NOTES

When installing adjacent to wall, ensure 2 ½” clearance on hinged side for 90° door opening, allowing ample room for door handle.
No additional clearance around sides, top or rear of unit is needed for ventilation.
Do not obstruct front grille air flow.

SPECIFICATIONS

Model	2224ZWC
Amps: Running	1.2
Capacity: Average Volume (cu ft)	4.7
Capacity: Wine Bottle (750 ml)	43
Control Type	Digital Touch Pad
Dimensions: Product Depth	23 7⁄16" / 590 mm
Dimensions: Product Height	33 11⁄16" / 856 mm
Dimensions: Product Width	23 5⁄8" / 600 mm
Energy Consumption: Avg. Per Year	250 kWh
ENERGY STAR	na
Product Weight: Max	150 lbs
Refrigerant Type	R600a
Sabbath (Star K Certified)	Yes
Temperature Range	34°F - 65°F

COOLING SYSTEM

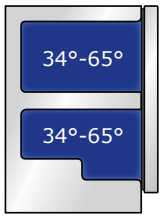

ELECTRICAL REQUIREMENTS

This unit requires a grounded a polarized 115 VAC, 60 Hz, 15 A power supply (normal household current).

Residential

Please visit u-line.com to view this model’s User Guide.
All specifications are subject to change without notice.

3018WC

18” Wine Captain® Model • Modular 3000 Series

STAINLESS FRAME

STAINLESS FRAME (LOCK)

INTEGRATED FRAME

INTEGRATED SOLID

FEATURES & BENEFITS

PERFORMANCE	• Volume of 3.6 cu ft holds up to 31 wine bottles (750 ml) • Temperature range: 38°F - 65°F • Convection cooling system rapidly and efficiently takes items to the set temperature • U-Select® Control offers three distinct modes: Sparkling Wine: 38°F - 50°F, White Wine: 45°F - 55°F, Red Wine: 55°F - 65°F • U-Select® Control with digital OLED display is ergonomically located on top of door • Maintains temperature to within 1°F of the set point to maximize preservation • Relative humidity inside the unit is approx. 50% • Rubber mounted compressor virtually eliminates vibration
INTERIOR/EXTERIOR	• Black interior is illuminated with LED theater lighting that automatically turns off when the door is closed, or can be set to stay on for 3, 6, or 24 hours • Robust full-extension black vinyl coated wine racks allow for easy access and prevent bottles from shifting • Wine racks accommodate a variety of bottle shapes and sizes; the fourth and fifth racks allow for larger diameter wine and champagne bottles • LowE coated, argon gas filled thermopane glass door provides protection from harmful UV light • Standard commercial stainless steel handle is interchangeable with professional handle accessory • Must be ordered right-hand or left-hand hinged
INTEGRATION	• Robust, concealed and covered hinges with built-in door stop and closer • Adjustable grille can be shifted front-to-back and up-and-down • Integrated model requires ¾” custom door panel • Grille can accept an overlay toe-kick • Four independently adjustable leveling legs; rear legs are adjustable from the front for ease of installation

MODEL DETAILS

Model	Voltage	Door Swing	Finish	Shipping Weight
U-3018WCS-00A	115	Right-Hand Hinge	Stainless Frame	134 lbs
U-3018WCS-01A	115	Left-Hand Hinge	Stainless Frame	134 lbs
U-3018WCS-13A	115	Right-Hand Hinge	Stainless Frame (Lock)	134 lbs
U-3018WCS-15A	115	Left-Hand Hinge	Stainless Frame (Lock)	134 lbs
U-3018WCINT-00A	115	Right-Hand Hinge	Integrated Frame	139 lbs
U-3018WCINT-01A	115	Left-Hand Hinge	Integrated Frame	139 lbs
U-3018WCINT-60A	115	Right-Hand Hinge	Integrated Solid	133 lbs
U-3018WCINT-61A	115	Left-Hand Hinge	Integrated Solid	133 lbs

ACCESSORIES

Model	Description	Finish	Shipping Weight
23054	Professional Door Handle, 1 ¼” Diameter	Stainless	2 lbs

3018WC

Modular 3000 Series • 18” Wine Captain® Model

DIMENSIONS

Dimensions shown apply to all finishes, including Integrated (INT) models with ¾” overlay panel/frame installed.

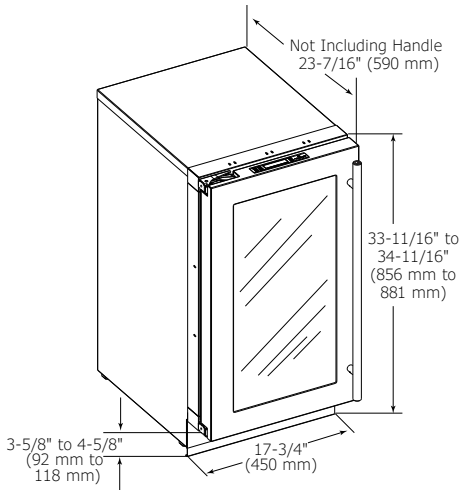

CABINET CUT-OUT

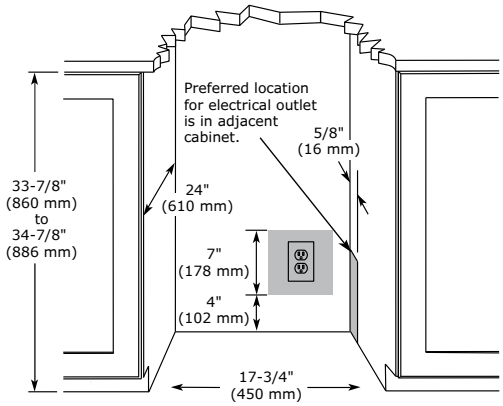

INSTALLATION NOTES

When installing adjacent to wall, ensure 2 ½” clearance on hinged side for 90° door opening, allowing ample room for door handle.
No additional clearance around sides, top or rear of unit is needed for ventilation.
Do not obstruct front grille air flow.

SPECIFICATIONS

Model	3018WC
Amps: Running	1.2
Capacity: Volume (cu ft)	3.6
Capacity: Wine Bottle (750 ml)	31
Control Type	U-Select®
Dimensions: Product Depth	23 7⁄16" / 590 mm
Dimensions: Product Height	33 11⁄16" / 856 mm
Dimensions: Product Width	17 ¾" / 450 mm
Energy Consumption: Avg. Per Year	250 kWh
ENERGY STAR	na
Product Weight: Max	125 lbs
Refrigerant Type	R600a
Sabbath (Star K Certified)	Yes
Temperature Range	38°F - 65°F

COOLING SYSTEM

ELECTRICAL REQUIREMENTS

This unit requires a grounded a polarized 115 VAC, 60 Hz, 15 A power supply (normal household current).

Residential

Please visit u-line.com to view this model’s User Guide.
All specifications are subject to change without notice.

3024ZWC

24” Wine Captain® Model • Modular 3000 Series

STAINLESS FRAME

STAINLESS FRAME (LOCK)

INTEGRATED FRAME

INTEGRATED SOLID

FEATURES & BENEFITS

PERFORMANCE	• Volume of 4.7 cu ft holds up to 43 wine bottles (750 ml) • Temperature range: 34°F - 65°F • U-Select® Control offers four distinct modes: Beverage: 34°F - 65°F, Sparkling Wine: 38°F - 50°F, White Wine: 45°F - 55°F, Red Wine: 55°F - 65°F • U-Select® Control with digital OLED display is ergonomically located on top of door • Maintains temperature to within 1°F of the set point to maximize preservation • Independently controlled dual-zones • Relative humidity inside the unit is approx. 50% • Rubber mounted compressor virtually eliminates vibration
INTERIOR/EXTERIOR	• Black interior is illuminated with LED theater lighting that automatically turns off when the door is closed, or can be set to stay on for 3, 6, or 24 hours • Robust full-extension black vinyl coated wine racks allow for easy access and prevent bottles from shifting • Wine racks accommodate a variety of bottle shapes and sizes; the third and sixth racks allow for larger diameter wine and champagne bottles • LowE coated, argon gas filled thermopane glass door provides protection from harmful UV light • Standard commercial stainless steel handle is interchangeable with professional handle accessory • Must be ordered right-hand or left-hand hinged
INTEGRATION	• Robust, concealed and covered hinges with built-in door stop and closer • Adjustable grille can be shifted front-to-back and up-and-down • Integrated model requires ¾” custom door panel • Grille can accept an overlay toe-kick • Four independently adjustable leveling legs; rear legs are adjustable from the front for ease of installation

MODEL DETAILS

Model	Voltage	Door Swing	Finish	Shipping Weight
U-3024ZWCS-00A	115	Right-Hand Hinge	Stainless Frame	160 lbs
U-3024ZWCS-01A	115	Left-Hand Hinge	Stainless Frame	160 lbs
U-3024ZWCS-13A	115	Right-Hand Hinge	Stainless Frame (Lock)	160 lbs
U-3024ZWCS-15A	115	Left-Hand Hinge	Stainless Frame (Lock)	160 lbs
U-3024ZWCINT-00A	115	Right-Hand Hinge	Integrated Frame	157 lbs
U-3024ZWCINT-01A	115	Left-Hand Hinge	Integrated Frame	157 lbs
U-3024ZWCINT-60A	115	Right-Hand Hinge	Integrated Solid	150 lbs
U-3024ZWCINT-61A	115	Left-Hand Hinge	Integrated Solid	150 lbs

ACCESSORIES

Model	Description	Finish	Shipping Weight
23054	Professional Door Handle, 1 ¼” Diameter	Stainless	2 lbs

3024ZWC

Modular 3000 Series • 24” Wine Captain® Model

DIMENSIONS

Dimensions shown apply to all finishes, including Integrated (INT) models with ¾” overlay panel/frame installed.

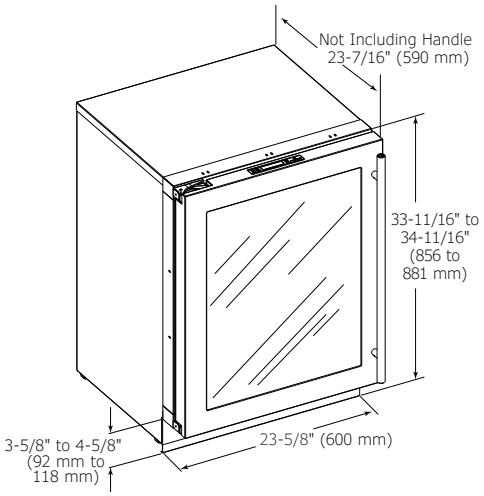

CABINET CUT-OUT

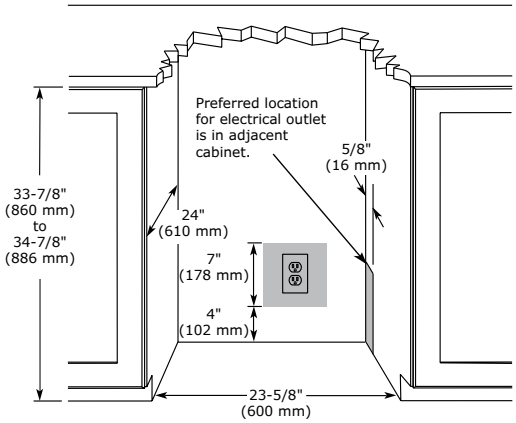

INSTALLATION NOTES

When installing adjacent to wall, ensure 2 ½” clearance on hinged side for 90° door opening, allowing ample room for door handle.
No additional clearance around sides, top or rear of unit is needed for ventilation.
Do not obstruct front grille air flow.

SPECIFICATIONS

Model	3024ZWC
Amps: Running	1.2
Capacity: Volume (cu ft)	4.7
Capacity: Wine Bottle (750 ml)	43
Control Type	U-Select®
Dimensions: Product Depth	23 7⁄16" / 590 mm
Dimensions: Product Height	33 11⁄16" / 856 mm
Dimensions: Product Width	23 5⁄8" / 600 mm
Energy Consumption: Avg. Per Year	250 kWh
ENERGY STAR	na
Product Weight: Max	150 lbs
Refrigerant Type	R600a
Sabbath (Star K Certified)	Yes
Temperature Range	34°F - 65°F

COOLING SYSTEM

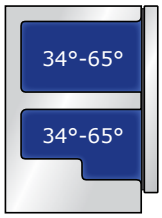

ELECTRICAL REQUIREMENTS

This unit requires a grounded a polarized 115 VAC, 60 Hz, 15 A power supply (normal household current).

Residential

Please visit u-line.com to view this model’s User Guide.
All specifications are subject to change without notice.

3036WCWC

36” Wine Captain® Model • Modular 3000 Series

STAINLESS FRAME

STAINLESS FRAME (LOCK)

INTEGRATED FRAME

FEATURES & BENEFITS

PERFORMANCE	• Volume of 7.0 cu ft holds up to 62 wine bottles (750 ml) • U-Select® Control with digital OLED display is ergonomically located on top of door • Temperature range: 38°F - 65°F • Convection cooling system rapidly and efficiently takes items to the set temperature • U-Select® Control has three distinct modes: Sparkling Wine: 38°F - 50°F, White Wine: 45°F - 55°F, Red Wine: 55°F - 65°F • Maintains temperature to within 1°F of the set point to maximize preservation • Independently controlled dual-zones • Relative humidity inside the unit is approx. 50% • Rubber mounted compressor virtually eliminates vibration
INTERIOR/EXTERIOR	• Black interior is illuminated with LED theater lighting that automatically turns off when the door is closed, or can be set to stay on for 3, 6, or 24 hours • Full extension black vinyl coated wine racks allow for easy access and prevent bottles from shifting • Wine racks accommodate a variety of bottle shapes and sizes; the fourth and fifth racks allow for larger diameter wine and champagne bottles • LowE coated, argon gas filled thermopane glass door provides protection from harmful UV light • Standard commercial stainless steel handle are interchangeable with professional handle accessory • Door lock model available
INTEGRATION	• Robust, concealed and covered hinges with built-in door stop and closer • Adjustable grille can be shifted front-to-back and up-and-down • Integrated model requires ¾” custom door panel • Grille can accept an overlay toe-kick • Four independently adjustable leveling legs; rear legs are adjustable from the front for ease of installation

MODEL DETAILS

Model	Voltage	Door Swing	Finish	Shipping Weight
U-3036WCWCS-00A	115	Double Doors	Stainless Frame	252 lbs
U-3036WCWCS-13A	115	Double Doors	Stainless Frame (Lock)	252 lbs
U-3036WCWCINT-00A	115	Double Doors	Integrated Frame	235 lbs
U-3036WCWCINT-60A	115	Double Doors	Integrated Solid	234 lbs

ACCESSORIES

Model	Description	Finish	Shipping Weight
23054	Professional Door Handle, 1 ¼” Diameter	Stainless	2 lbs

3036WCWC

Modular 3000 Series • 36” Wine Captain® Model

DIMENSIONS

Dimensions shown apply to all finishes, including Integrated (INT) models with ¾” overlay panel/frame installed.

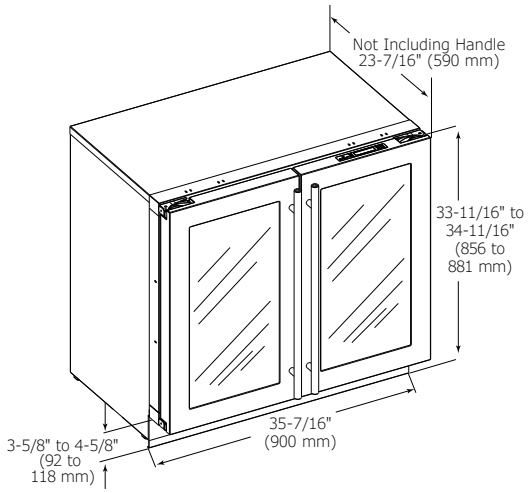

CABINET CUT-OUT

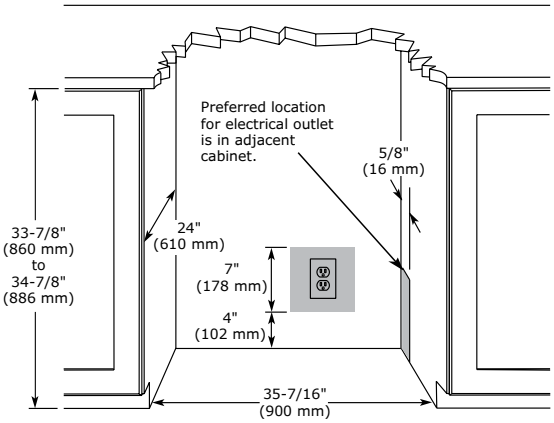

INSTALLATION NOTES

When installing adjacent to wall, ensure 2 ½” clearance on hinged side for 90° door opening, allowing ample room for door handle.
No additional clearance around sides, top or rear of unit is needed for ventilation.
Do not obstruct front grille air flow.

SPECIFICATIONS

Model	3036WCWC
Amps: Running	1.2
Capacity: Volume (cu ft)	7.0
Capacity: Wine Bottle (750 ml)	62
Control Type	U-Select®
Dimensions: Product Depth	23 7⁄16" / 590 mm
Dimensions: Product Height	33 11⁄16" / 856 mm
Dimensions: Product Width	35 7⁄16" / 900 mm
Energy Consumption: Avg. Per Year	250 kWh
ENERGY STAR	na
Product Weight: Max	226 lbs
Refrigerant Type	R600a
Sabbath (Star K Certified)	Yes
Temperature Range	38°F - 65°F

COOLING SYSTEM

ELECTRICAL REQUIREMENTS

This unit requires a grounded a polarized 115 VAC, 60 Hz, 15 A power supply (normal household current).

Residential

Please visit u-line.com to view this model’s User Guide.
All specifications are subject to change without notice.

Installed: 2224BEVINT

Beverage Centers

	1024BEV	1224BEV	2224BEV	3024BEV	3036BVWC
	1000 Series		2000 Series	3000 Series	
Capacity: Bottle (12 oz)	85	85	79	79	79
Capacity: Can (12 oz)	105	105	123	123	123
Capacity: Wine Bottle (750 ml)	16	16	10	10	31
Capacity: Volume (cu ft)	5.4	5.4	4.9	4.9	7.0
Control Type	Mechanical Dial	Digital Touch Pad	Digital Touch Pad	U-Select®	U-Select®
Dimensions: Product Depth	23 ¼" / 591 mm	23 ¼" / 591 mm	23 7⁄16" / 590 mm	23 7⁄16" / 590 mm	23 7⁄16" / 590 mm
Dimensions: Product Height	34 ⅛" / 867 mm	34 ⅛" / 867 mm	33 11⁄16" / 856 mm	33 11⁄16" / 856 mm	33 11⁄16" / 856 mm
Dimensions: Product Width	24" / 610 mm*	24" / 610 mm*	23 ⅝" / 600 mm	23 ⅝" / 600 mm	35 7⁄16" / 900 mm
Door Swing	Field Reversible	Field Reversible	Right or Left	Right or Left	Double Doors
Energy Consumption: Avg. Per Year	305 kWh	305 kWh	300 kWh	300 kWh	321.5 kWh
ENERGY STAR	No	No	No	No	No
Finishes	Stainless	Stainless Integrated	Stainless Integrated	Stainless Integrated	Stainless Integrated
Lock Model Available	No	Yes	Yes	Yes	Yes
Sabbath (Star K Certified)	No	Yes	Yes	Yes	Yes
Temperature Range	34°F - 45°F	34°F - 45°F	34°F - 45°F	34°F - 70°F	38°F - 65°F / 34°F - 70°F
UL Listing	Residential	Residential / Commercial	Residential	Residential	Residential

*The cutout requires an additional ¼" width overall to ensure proper installation.

1024BEV

24” Beverage Center • 1000 Series

STAINLESS
FRAME

FEATURES & BENEFITS

PERFORMANCE	• Overall volume of 5.4 cu ft holds up to 85 bottles (12 oz) or 105 cans (12 oz) and 16 wine bottles (750 ml) • Mechanical Dial Control is conveniently located on the grille • Temperature range: 34°F - 45°F • Mechanical passive cooling system
INTERIOR/EXTERIOR	• White interior is illuminated with recessed incandescent lighting that automatically turns off when the door is closed • Three-quarter extension zinc coated wine racks allow for easy access • Wine racks accommodate a variety of bottle shapes and sizes • Two removable tempered glass shelves • LowE coated, argon gas filled thermopane glass door provides protection from harmful UV light • Standard commercial stainless steel handle is interchangeable with professional handle accessory • Door swing is field reversible
INTEGRATION	• Unit is designed to be built-in or can be freestanding with the freestanding accessory kit • Solid natural beech wood fronts on wine racks can easily be stained to match surrounding cabinetry • Four independently adjustable levelling legs provide a precise undercounter fit

MODEL DETAILS

Model	Voltage	Door Swing	Finish	Shipping Weight
U-1024BEVS-00A	115	Field Reversible Door	Stainless Frame	126 lbs

ACCESSORIES

Model	Description	Finish	Shipping Weight
23054	Professional Door Handle, 1 ¼” Diameter	Stainless	2 lbs
U-FSK-B	Freestanding Kit	Black	3 lbs

DIMENSIONS

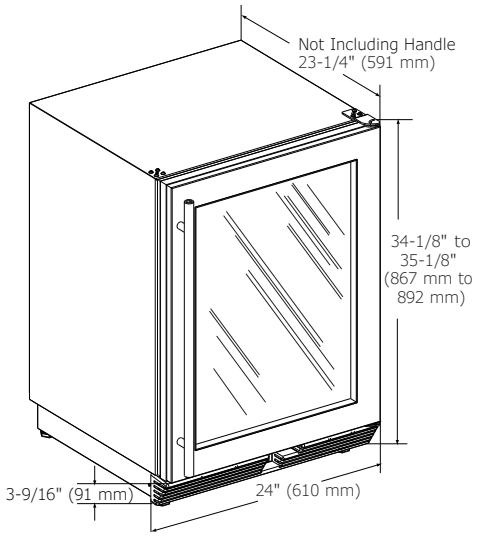

CABINET CUT-OUT

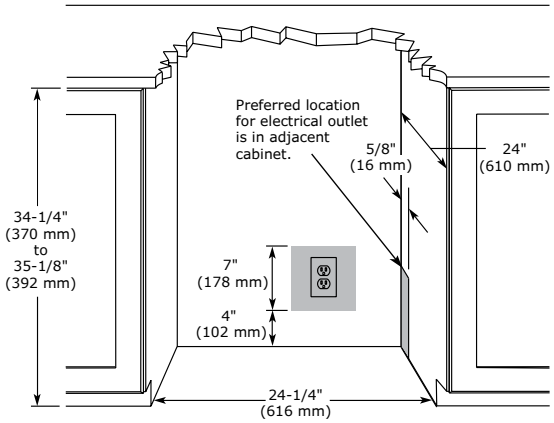

INSTALLATION NOTES

When installing adjacent to wall, ensure 2 ½” clearance on hinged side for 90° door opening, allowing ample room for door handle.
Cutout includes the additional ¼” width overall to ensure proper installation.
No additional clearance around sides, top or rear of unit is needed for ventilation.
Do not obstruct front grille air flow.

SPECIFICATIONS

Model	1024BEV
Amps: Running	1.2
Capacity: Bottle (12 oz)	85
Capacity: Can (12 oz)	105
Capacity: Volume (cu ft)	5.4
Capacity: Wine Bottle (750 ml)	16
Control Type	Mechanical Dial
Dimensions: Product Depth	23 ¼" / 591 mm
Dimensions: Product Height	34 ⅛" / 867 mm
Dimensions: Product Width	24" / 610 mm
Energy Consumption: Avg. Per Year	305 kWh
ENERGY STAR	No
Product Weight: Max	116 lbs
Refrigerant Type	R600a
Sabbath (Star K Certified)	No
Temperature Range	34°F - 45°F

COOLING SYSTEM

ELECTRICAL REQUIREMENTS

This unit requires a grounded a polarized 115 VAC, 60 Hz, 15 A power supply (normal household current).

Residential

Please visit u-line.com to view this model’s User Guide.
All specifications are subject to change without notice.

1224BEV

24” Beverage Center • 1000 Series

STAINLESS FRAME

STAINLESS FRAME (LOCK)

INTEGRATED FRAME

INTEGRATED SOLID

FEATURES & BENEFITS

PERFORMANCE	• Volume of 5.4 cu ft holds up to 85 bottles (12 oz) or 105 cans (12 oz) and 16 wine bottles (750 ml) • Digital Touch Pad Control is conveniently located on upper face of unit • Temperature range: 34°F - 45°F • Digital passive cooling system • Maintains temperature to within 1°F of the set point to maximize preservation
INTERIOR/EXTERIOR	• Black interior is illuminated with LED lighting that automatically turns off when the door is closed, or can be set to stay on for 3 hours • Three-quarter extension black vinyl coated wine racks allow for easy access and prevent bottles from shifting • Wine racks accommodate a variety of bottle shapes and sizes • Two removable tempered glass shelves • LowE coated, argon gas filled thermopane glass door provides protection from harmful UV light • Standard commercial stainless steel handle is interchangeable with professional handle accessory • Door swing is field reversible • Door lock model available
INTEGRATION	• Unit is designed to be built-in or can be freestanding with the freestanding accessory kit • Solid natural beech wood fronts on wine racks can easily be stained to match surrounding cabinetry • Integrated model requires ¾” custom door panel • Four independently adjustable levelling legs provide a precise undercounter fit • Available in the following finishes: Stainless or Integrated

MODEL DETAILS

Model	Voltage	Door Swing	Finish	Shipping Weight
U-1224BEVS-00A	115	Field Reversible	Stainless Frame	127 lbs
U-1224BEVS-13A	115	Field Reversible	Stainless Frame (Lock)	127 lbs
U-1224BEVINT-00A	115	Field Reversible	Integrated Frame	121 lbs
U-1224BEVINT-60A	115	Field Reversible	Integrated Solid	113 lbs

ACCESSORIES

Model	Description	Finish	Shipping Weight
23054	Professional Door Handle, 1 ¼” Diameter	Stainless	2 lbs
U-FSK-B	Freestanding Kit	Black	3 lbs

DIMENSIONS

Dimensions shown apply to all finishes, including Integrated (INT) models with ¾” overlay panel/frame installed.

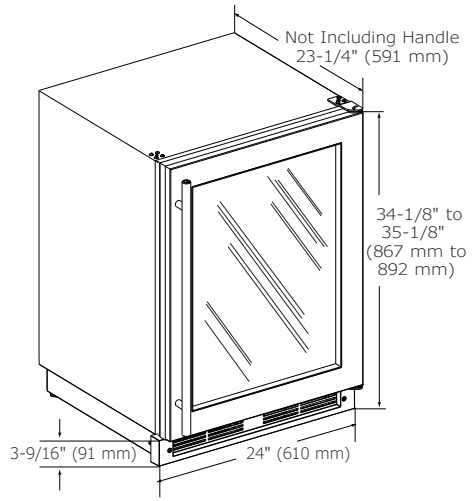

CABINET CUT-OUT

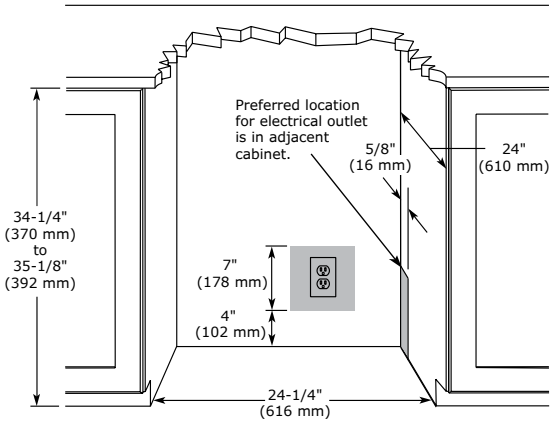

INSTALLATION NOTES

When installing adjacent to wall, ensure 2 ½” clearance on hinged side for 90° door opening, allowing ample room for door handle.
Cutout includes the additional ¼” width overall to ensure proper installation.
No additional clearance around sides, top or rear of unit is needed for ventilation.
Do not obstruct front grille air flow.

SPECIFICATIONS

Model	1224BEV
Amps: Running	1.2
Capacity: Bottle (12 oz)	85
Capacity: Can (12 oz)	105
Capacity: Volume (cu ft)	5.4
Capacity: Wine Bottle (750 ml)	16
Control Type	Digital Touch Pad
Dimensions: Product Depth	23 ¼" / 591 mm
Dimensions: Product Height	34 ⅛" / 867 mm
Dimensions: Product Width	24" / 610 mm
Energy Consumption: Avg. Per Year	305 kWh
ENERGY STAR	No
Product Weight: Max	111 lbs
Refrigerant Type	R600a
Sabbath (Star K Certified)	Yes
Temperature Range	34°F - 45°F

COOLING SYSTEM

ELECTRICAL REQUIREMENTS

This unit requires a grounded a polarized 115 VAC, 60 Hz, 15 A power supply (normal household current).

Residential & Commercial

Please visit u-line.com to view this model’s User Guide.
All specifications are subject to change without notice.

2224BEV

24” Beverage Center • 2000 Series

STAINLESS FRAME

STAINLESS FRAME (LOCK)

INTEGRATED FRAME

INTEGRATED SOLID

FEATURES & BENEFITS

PERFORMANCE	• Volume of 4.9 cu ft holds up to 79 bottles (12 oz) or 123 cans (12 oz) and 10 wine bottles (750 ml) • Digital Touch Pad Control is conveniently located on upper face of unit • Temperature range: 34°F - 45°F • Convection cooling system rapidly and efficiently takes items to the set temperature • Maintains temperature to within 1°F of the set point to maximize preservation
INTERIOR/EXTERIOR	• Black interior is illuminated with LED lighting that automatically turns off when the door is closed, or can be set to stay on for 3 hours • Full extension black vinyl coated wine racks allow for easy access and prevent bottles from shifting • Wine racks accommodate a variety of bottle shapes and sizes • Three adjustable tempered glass shelves with 7 height positions • LowE coated, argon gas filled thermopane glass door provides protection from harmful UV light • Standard commercial stainless steel handle is interchangeable with professional handle accessory
INTEGRATION	• Solid natural beech wood fronts on wine racks can easily be stained to match surrounding cabinetry • Robust, concealed and covered hinges with built-in door stop and closer • Integrated model requires ¾” custom door panel • Fixed grille can accept a ¼” custom integrated toe-kick • Four independently adjustable leveling legs provide a precise undercounter fit

MODEL DETAILS

Model	Voltage	Door Swing	Finish	Shipping Weight
U-2224BEVS-00A	115	Right-Hand Hinge	Stainless Frame	156 lbs
U-2224BEVS-01A	115	Left-Hand Hinge	Stainless Frame	156 lbs
U-2224BEVS-13A	115	Right-Hand Hinge	Stainless Frame (Lock)	156 lbs
U-2224BEVS-15A	115	Left-Hand Hinge	Stainless Frame (Lock)	156 lbs
U-2224BEVINT-00A	115	Right-Hand Hinge	Integrated Frame	144 lbs
U-2224BEVINT-01A	115	Left-Hand Hinge	Integrated Frame	144 lbs
U-2224BEVINT-60A	115	Right-Hand Hinge	Integrated Solid	132 lbs
U-2224BEVINT-61A	115	Left-Hand Hinge	Integrated Solid	132 lbs

ACCESSORIES

Model	Description	Finish	Shipping Weight
23054	Professional Door Handle, 1 ¼” Diameter	Stainless	2 lbs

DIMENSIONS

Dimensions shown apply to all finishes, including Integrated (INT) models with ¾” overlay panel/frame installed.

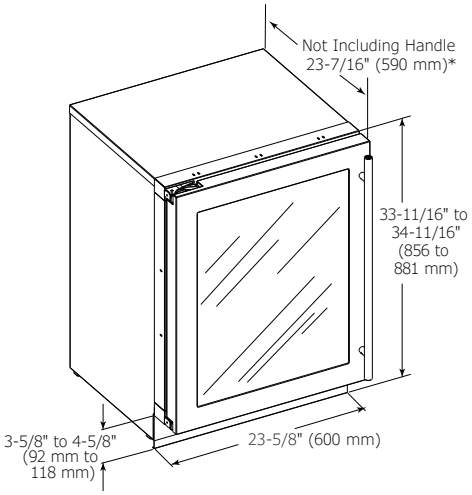

CABINET CUT-OUT

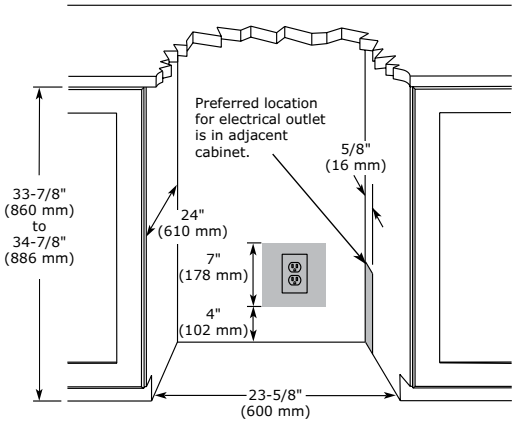

INSTALLATION NOTES

When installing adjacent to wall, ensure 2 ½” clearance on hinged side for 90° door opening, allowing ample room for door handle.
No additional clearance around sides, top or rear of unit is needed for ventilation.
Do not obstruct front grille air flow.

SPECIFICATIONS

Model	2224BEV
Amps: Running	1.2
Capacity: Bottle (12 oz)	79
Capacity: Can (12 oz)	123
Capacity: Volume (cu ft)	4.9
Capacity: Wine Bottle (750 ml)	10
Control Type	Digital Touch Pad
Dimensions: Product Depth	23 7⁄16" / 590 mm
Dimensions: Product Height	33 11⁄16" / 856 mm
Dimensions: Product Width	23 5⁄8" / 600 mm
Energy Consumption: Avg. Per Year	300 kWh
ENERGY STAR	No
Product Weight: Max	135 lbs
Refrigerant Type	R600a
Sabbath (Star K Certified)	Yes
Temperature Range	34°F - 45°F

COOLING SYSTEM

ELECTRICAL REQUIREMENTS

This unit requires a grounded a polarized 115 VAC, 60 Hz, 15 A power supply (normal household current).

Residential

Please visit u-line.com to view this model’s User Guide.
All specifications are subject to change without notice.

3024BEV

24” Beverage Center • Modular 3000 Series

STAINLESS FRAME

STAINLESS FRAME (LOCK)

INTEGRATED FRAME

INTEGRATED SOLID

FEATURES & BENEFITS

PERFORMANCE	• Volume of 4.9 cu ft holds up to 79 bottles (12 oz) or 123 cans (12 oz) and 10 wine bottles (750 ml) • Temperature range: 34°F - 70°F • Convection cooling system rapidly and efficiently takes items to the set temperature • U-Select® Control offers five distinct modes: Beverage: 34°F - 40°F, Deli: 34°F - 40°F, Market: 34°F - 40°F, Pantry: 34°F - 70°F, Root Cellar: 45°F - 55°F • U-Select® Control with digital OLED display is ergonomically located on top of door • Maintains temperature to within 1°F of the set point to maximize preservation
INTERIOR/EXTERIOR	• Black interior is illuminated with LED theater lighting that automatically turns off when the door is closed, or can be set to stay on for 3, 6, or 24 hours • Robust full-extension black vinyl coated wine racks allow for easy access and prevent bottles from shifting • Wine racks accommodate a variety of bottle shapes and sizes • Three adjustable tempered glass shelves with 7 height positions • LowE coated, argon gas filled thermopane glass door provides protection from harmful UV light • Standard commercial stainless steel handle is interchangeable with professional handle accessory • Must be ordered right-hand or left-hand hinged
INTEGRATION	• Robust, concealed and covered hinges with built-in door stop and closer • Adjustable grille can be shifted front-to-back and up-and-down • Grille can accept a ¼” custom integrated toe-kick • Integrated model requires ¾” custom door panel • Four independently adjustable leveling legs; rear legs are adjustable from the front for ease of installation

MODEL DETAILS

Model	Voltage	Door Swing	Finish	Shipping Weight
U-3024BEVS-00A	115	Right-Hand Hinge	Stainless Frame	156 lbs
U-3024BEVS-01A	115	Left-Hand Hinge	Stainless Frame	156 lbs
U-3024BEVS-13A	115	Right-Hand Hinge	Stainless Frame (Lock)	156 lbs
U-3024BEVS-15A	115	Left-Hand Hinge	Stainless Frame (Lock)	156 lbs
U-3024BEVINT-00A	115	Right-Hand Hinge	Integrated Frame	144 lbs
U-3024BEVINT-01A	115	Left-Hand Hinge	Integrated Frame	144 lbs
U-3024BEVINT-60A	115	Right-Hand Hinge	Integrated Solid	132 lbs
U-3024BEVINT-61A	115	Left-Hand Hinge	Integrated Solid	132 lbs

ACCESSORIES

Model	Description	Finish	Shipping Weight
23054	Professional Door Handle, 1 ¼” Diameter	Stainless	2 lbs

DIMENSIONS

Dimensions shown apply to all finishes, including Integrated (INT) models with ¾” overlay panel/frame installed.

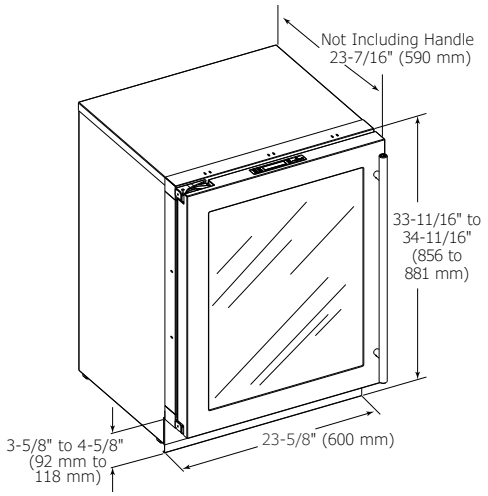

CABINET CUT-OUT

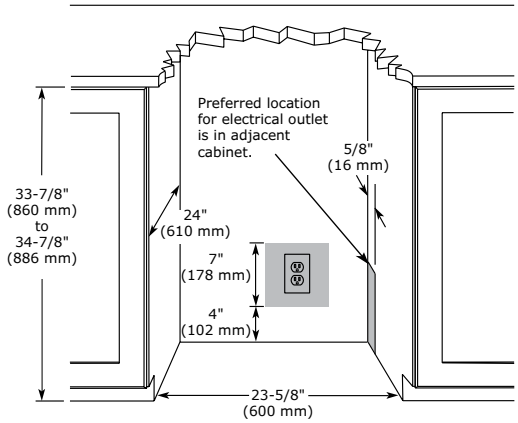

INSTALLATION NOTES

When installing adjacent to wall, ensure 2 ½” clearance on hinged side for 90° door opening, allowing ample room for door handle.
No additional clearance around sides, top or rear of unit is needed for ventilation.
Do not obstruct front grille air flow.

SPECIFICATIONS

Model	3024BEV
Amps: Running	1.2
Capacity: Bottle (12 oz)	79
Capacity: Can (12 oz)	123
Capacity: Volume (cu ft)	4.9
Capacity: Wine Bottle (750 ml)	10
Control Type	U-Select®
Dimensions: Product Depth	23 7⁄16" / 590 mm
Dimensions: Product Height	33 11⁄16" / 856 mm
Dimensions: Product Width	23 5⁄8" / 600 mm
Energy Consumption: Avg. Per Year	300 kWh
ENERGY STAR	No
Product Weight: Max	146 lbs
Refrigerant Type	R600a
Sabbath (Star K Certified)	Yes
Temperature Range	34°F - 70°F

COOLING SYSTEM

ELECTRICAL REQUIREMENTS

This unit requires a grounded a polarized 115 VAC, 60 Hz, 15 A power supply (normal household current).

Residential

Please visit u-line.com to view this model’s User Guide.
All specifications are subject to change without notice.

3036BVWC

36” Beverage Center • Modular 3000 Series

STAINLESS FRAME

STAINLESS FRAME (LOCK)

INTEGRATED FRAME

INTEGRATED SOLID

FEATURES & BENEFITS

PERFORMANCE	• Volume of 7.0 cu ft holds up to 79 bottles (12 oz) or 123 cans (12 oz) and 31 wine bottles (750 ml) • Temperature range: 34°F - 70°F • Convection cooling system rapidly and efficiently takes items to the set temperature • U-Select® Control offers five distinct modes (right side): Beverage: 34°F - 40°F, Deli: 34°F - 40°F, Market: 34°F - 40°F, Pantry: 34°F - 70°F, Root Cellar: 45°F - 55°F • U-Select® Control offers four distinct modes (left side): Beverage: 34°F - 65°F, Sparkling Wine: 38°F - 50°F, White Wine: 45°F - 55°F, Red Wine: 55°F - 65°F • U-Select® Control with digital OLED display is ergonomically located on top of door • Maintains temperature to within 1°F of the set point to maximize preservation • Independently controlled dual-zones • Relative humidity inside the unit is approx. 50% • Rubber mounted compressor virtually eliminates vibration
INTERIOR/EXTERIOR	• Black interior is illuminated with LED theater lighting that automatically turns off when the door is closed, or can be set to stay on for 3, 6, or 24 hours • Robust full-extension black vinyl coated wine racks allow for easy access and prevent bottles from shifting • Wine racks accommodate a variety of bottle shapes and sizes; the fourth and fifth racks allow for larger diameter wine and champagne bottles • Wine racks are designed to accommodate a variety of bottle shapes and sizes • The right compartment offers 3 adjustable tempered glass shelves with 11 height positions • The right compartment features a full-extension, slide-out crisper drawer that is removable for easy cleaning • LowE coated, argon gas filled thermopane glass door provides protection from harmful UV light • Standard commercial stainless steel handle is interchangeable with professional handle accessory
INTEGRATION	• Robust, concealed and covered hinges with built-in door stop and closer • Adjustable grille can be shifted front-to-back and up-and-down • Grille can accept a ¼” custom integrated toe-kick • Integrated model requires ¾” custom door panel • Four independently adjustable leveling legs; rear legs are adjustable from the front for ease of installation

MODEL DETAILS

Model	Voltage	Door Swing	Finish	Shipping Weight
U-3036BVWCS-00A	115	Double Doors	Stainless Frame	247 lbs
U-3036BVWCS-13A	115	Double Doors	Stainless Frame (Lock)	247 lbs
U-3036BVWCINT-00A	115	Double Doors	Integrated Frame	230 lbs
U-3036BVWCINT-60A	115	Double Doors	Integrated Solid	226 lbs

ACCESSORIES

Model	Description	Finish	Shipping Weight
23054	Professional Door Handle, 1 ¼” Diameter	Stainless	2 lbs

DIMENSIONS

Dimensions shown apply to all finishes, including Integrated (INT) models with ¾” overlay panel/frame installed.

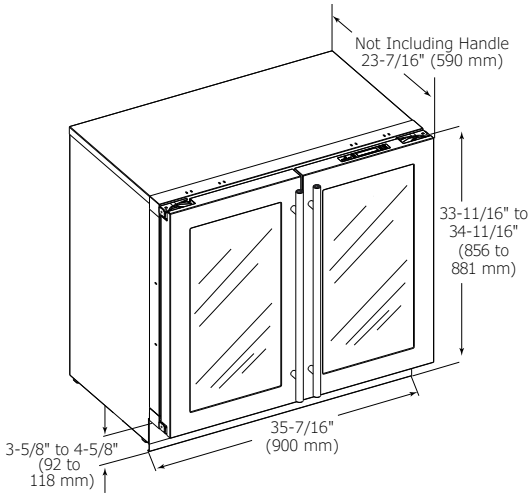

CABINET CUT-OUT

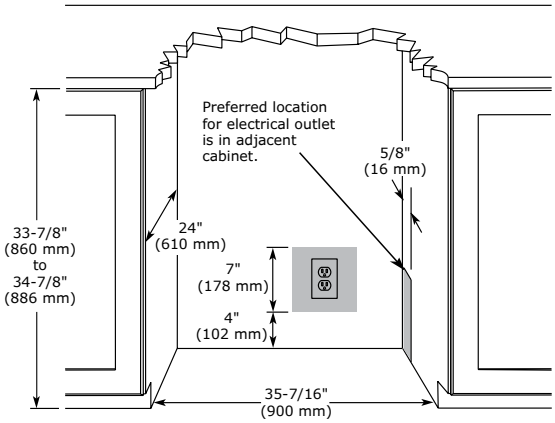

SPECIFICATIONS

Model	3036BVWC
Amps: Running	1.2
Capacity: Bottle (12 oz)	79
Capacity: Can (12 oz)	123
Capacity: Volume (cu ft)	7.0
Capacity: Wine Bottle (750 ml)	31
Control Type	U-Select®
Dimensions: Product Depth	23 7⁄16" / 590 mm
Dimensions: Product Height	33 11⁄16" / 856 mm
Dimensions: Product Width	35 7⁄16" / 900 mm
Energy Consumption: Avg. Per Year	321.5 kWh
ENERGY STAR	No
Product Weight: Max	221 lbs
Refrigerant Type	R600a
Sabbath (Star K Certified)	Yes
Temperature Range	Left: 38°F - 65°F Right: 34°F - 70°F

INSTALLATION NOTES

When installing adjacent to wall, ensure 2 ½” clearance on hinged side for 90° door opening, allowing ample room for door handle.
No additional clearance around sides, top or rear of unit is needed for ventilation.
Do not obstruct front grille air flow.

COOLING SYSTEM

CONVECTION COOLING SYSTEM

ELECTRICAL REQUIREMENTS

This unit requires a grounded a polarized 115 VAC, 60 Hz, 15 A power supply (normal household current).

Residential

Please visit u-line.com to view this model’s User Guide.
All specifications are subject to change without notice.

Installed: 36” Custom Model (3018RGLINT & 3018CLRINT with Ice Flange Kit)

Clear Ice Machines

	CLR1215	3018CLR
	1000 Series	3000 Series
Control Type	Digital Touch Pad	U-Select®
Dimensions: Product Depth	24" / 610 mm	24" / 610 mm
Dimensions: Product Height	34 ⅛" / 867 mm	33 11⁄16" / 856 mm
Dimensions: Product Width	14 15⁄16" / 379 mm*	17 ¾" / 450 mm
Door Swing	Field Reversible	Right or Left
Energy Consumption: Avg. Per Year	na	na
ENERGY STAR	na	na
Finishes	Stainless Integrated Black White	Stainless Integrated
Ice Production Per Day	60 lbs	60 lbs
Ice Storage	30 lbs	30 lbs
Lock Model Available	No	No
Sabbath (Star K Certified)	Yes	Yes
UL Listing	Residential	Residential

*The cutout requires an additional ¼" width overall to ensure proper installation.
For Outdoor Series Clear Ice Machine data, see page 128.

CLR1215

15” Clear Ice Machine • 1000 Series

STAINLESS SOLID

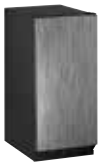

INTEGRATED SOLID

BLACK SOLID

WHITE SOLID

FEATURES & BENEFITS

PERFORMANCE	• Daily ice production of up to 60 lbs of ice • Up to 30 lbs in ice storage capacity • Clear ice cube dimensions: ⅞” W x ⅞” H x ⅞” L • Clear ice cube fullness can be adjusted • Silent setting temporarily suspends ice making for 3 hours • Digital Touch Pad Control is conveniently located on face of unit • Indicator alert notifies user when cleaning is needed • Easy clean process only lasts 45 minutes
INTERIOR/EXTERIOR	• White interior is illuminated with LED lighting • Clear heavy duty ice scoop included • Drain required • Model can be ordered with factory installed P60 drain pump if gravity drain is not accessible • Factory installed water and drain line simplifies installation • Standard commercial stainless steel handle is interchangeable with professional handle accessory • Door swing is field reversible
INTEGRATION	• Unit is designed to be built-in or can be freestanding • Integrated model requires ¾” custom door panel • Four independently adjustable leveling legs provide a precise undercounter fit • Available in the following finishes: Stainless, Integrated, Black, or White

MODEL DETAILS

Model	Voltage	Door Swing	Pump	Finish	Shipping Weight
U-CLR1215S-00A	115	Field Reversible	-	Stainless Solid	95 lbs
U-CLR1215S-40A	115	Field Reversible	Pump Included	Stainless Solid	101 lbs
U-CLR1215INT-00A	115	Field Reversible	-	Integrated Solid	92 lbs
U-CLR1215INT-40A	115	Field Reversible	Pump Included	Integrated Solid	98 lbs
U-CLR1215B-00A	115	Field Reversible	-	Black Solid	95 lbs
U-CLR1215B-40A	115	Field Reversible	Pump Included	Black Solid	101 lbs
U-CLR1215W-00A	115	Field Reversible	-	White Solid	92 lbs
U-CLR1215W-40A	115	Field Reversible	Pump Included	White Solid	101 lbs

ACCESSORIES

Model	Description	Finish	Shipping Weight
23054	Professional Door Handle, 1 ¼” Diameter	Stainless	2 lbs
MP37050	Clear Ice Maker Cleaner (1 box of 6 packets)	na	1 lb
P60	Drain Pump	na	7 lbs

CLR1215

1000 Series • 15” Clear Ice Machine

DIMENSIONS

Dimensions shown apply to all finishes, including Integrated (INT) models with ¾” overlay panel/frame installed.

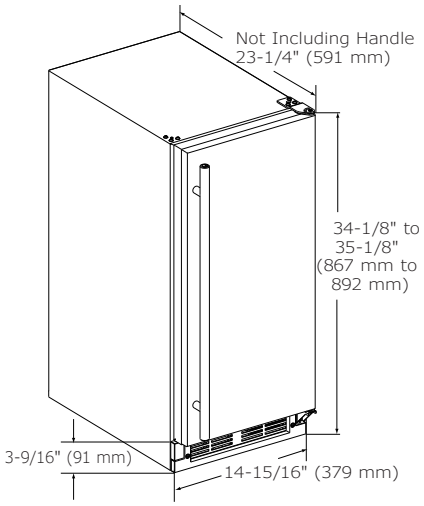

CABINET CUT-OUT

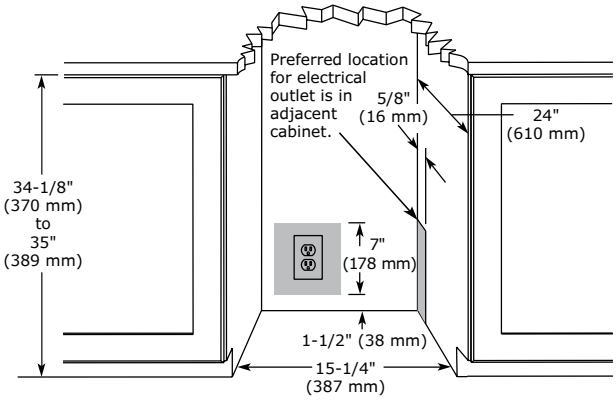

INSTALLATION NOTES

When installing adjacent to wall, ensure 2 ½” clearance on hinged side for 90° door opening, allowing ample room for door handle.
No additional clearance around sides, top or rear of unit is needed for ventilation.
Do not obstruct front grille air flow.

SPECIFICATIONS

Model	CLR1215
Amps: Running	4
Amps: Ice Harvest	5.5
Control Type	Digital Touch Pad
Defrost Type	na
Dimensions: Product Depth	24" / 610 mm
Dimensions: Product Height	34 ⅛" / 867 mm
Dimensions: Product Width	14 15⁄16" / 379 mm
ENERGY STAR	na
Ice Production Per Day	60 lbs
Ice Storage	30 lbs
Product Weight: Max	91 lbs
Refrigerant Type	R134a
Sabbath (Star K Certified)	Yes

ELECTRICAL REQUIREMENTS

This unit requires a grounded a polarized 115 VAC, 60 Hz, 15 A power supply (normal household current).

Please visit u-line.com to view this model’s User Guide.
All specifications are subject to change without notice.

3018CLR

18” Clear Ice Machine • Modular 3000 Series

STAINLESS SOLID

INTEGRATED SOLID

FEATURES & BENEFITS

PERFORMANCE	• Daily ice production of up to 60 lbs of ice • Up to 30 lbs in ice storage capacity • Clear ice cube dimensions: ⅞” W x ⅞” H x ⅞” L • Clear ice cube fullness can be adjusted • Silent mode temporarily suspends ice making for 3 hours • U-Select® Control with digital OLED display is ergonomically located on top of door • Indicator alert notifies user when cleaning is needed • Easy clean process only lasts 45 minutes
INTERIOR/EXTERIOR	• Black interior is illuminated with LED theater lighting • Clear heavy duty ice scoop included • Drain required • Model can be ordered with factory installed P60 drain pump if gravity drain is not accessible • Factory installed water and drain line simplifies installation • Standard commercial stainless steel handle is interchangeable with professional handle accessory • Must be ordered right-hand or left-hand hinged
INTEGRATION	• Robust, concealed and covered hinges with built-in door stop and closer • Adjustable grille can be shifted front-to-back and up-and-down • Grille can accept a ¼” custom integrated toe-kick • Integrated model requires ¾” custom door panel • Four independently adjustable leveling legs; rear legs are adjustable from the front for ease of installation

MODEL DETAILS

Model	Voltage	Door Swing	Pump	Finish	Shipping Weight
U-3018CLRS-00A	115	Right-Hand Hinge	-	Stainless Solid	118 lbs
U-3018CLRS-01A	115	Left-Hand Hinge	-	Stainless Solid	118 lbs
U-3018CLRS-40A	115	Right-Hand Hinge	Pump Included	Stainless Solid	124 lbs
U-3018CLRS-41A	115	Left-Hand Hinge	Pump Included	Stainless Solid	124 lbs
U-3018CLRINT-00A	115	Right-Hand Hinge	-	Integrated Solid	110 lbs
U-3018CLRINT-01A	115	Left-Hand Hinge	-	Integrated Solid	110 lbs
U-3018CLRINT-40A	115	Right-Hand Hinge	Pump Included	Integrated Solid	116 lbs
U-3018CLRINT-41A	115	Left-Hand Hinge	Pump Included	Integrated Solid	116 lbs

ACCESSORIES

Model	Description	Finish	Shipping Weight
23054	Professional Door Handle, 1 ¼” Diameter	Stainless	2 lbs
P60	Drain Pump	na	7 lbs

DIMENSIONS

Dimensions shown apply to all finishes, including Integrated (INT) models with ¾” overlay panel/frame installed.

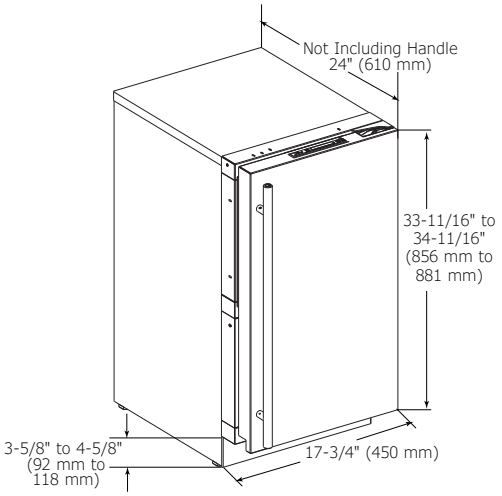

CABINET CUT-OUT

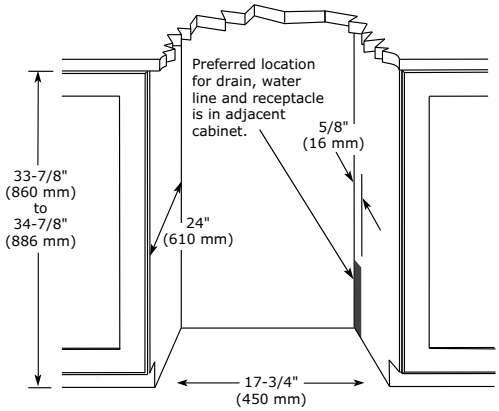

INSTALLATION NOTES

When installing adjacent to wall, ensure 2 ½” clearance on hinged side for 90° door opening, allowing ample room for door handle.
No additional clearance around sides, top or rear of unit is needed for ventilation.
Do not obstruct front grille air flow.

SPECIFICATIONS

Model	3018CLR
Amps: Running	4
Amps: Ice Harvest	5.5
Control Type	U-Select®
Defrost Type	Automatic
Dimensions: Product Depth	24" / 610 mm
Dimensions: Product Height	33 11⁄16" / 856 mm
Dimensions: Product Width	17 ¾" / 450 mm
ENERGY STAR	na
Ice Production Per Day	60 lbs
Ice Storage	30 lbs
Product Weight: Max	114 lbs
Refrigerant Type	R134a
Sabbath (Star K Certified)	Yes

ELECTRICAL REQUIREMENTS

This unit requires a grounded a polarized 115 VAC, 60 Hz, 15 A power supply (normal household current).

Please visit u-line.com to view this model’s User Guide.
All specifications are subject to change without notice.

Installed: 1224BEVINT, BI1215INT

Crescent Ice Makers

	BI1215
	1000 Series
Control Type	On/Off Switch
Dimensions: Product Depth	23 ¼" / 591 mm
Dimensions: Product Height	34 ⅛" / 867 mm
Dimensions: Product Width	14 15⁄16" / 379 mm*
Door Swing	Field Reversible
Energy Consumption: Avg. Per Year	na
ENERGY STAR	na
Finishes	Stainless Integrated Black White
Ice Production Per Day	25 lbs
Ice Storage	25 lbs
Lock Model Available	No
Sabbath (Star K Certified)	No
UL Listing	Yes

*The cutout requires an additional ¼" width overall to ensure proper installation.
For ADA Series Crescent Ice Maker data, see page 126.
For Outdoor Series Crescent Ice Maker data, see page 128.

BI1215

15” Crescent Ice Maker • 1000 Series

STAINLESS SOLID

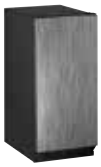

INTEGRATED SOLID

BLACK SOLID

WHITE SOLID

FEATURES & BENEFITS

PERFORMANCE	• Uses less than 3 gallons of water to produce up to 25 lbs of ice per day • Up to 25 lbs in ice storage capacity • Daily ice production rate is approx. 4 times greater than the average household refrigerator • Crescent ice cube dimensions: ½” W x ¾” H x ½” L • On/Off switch is conveniently located on lower face of unit
INTERIOR/EXTERIOR	• No drain required • Standard commercial stainless steel handle is interchangeable with professional handle accessory • Door swing is field reversible
INTEGRATION	• Unit is designed to be built-in or can be freestanding • Integrated model requires ¾” custom door panel • Four independently adjustable leveling legs provide a precise undercounter fit • Available in the following finishes: Stainless, Integrated, Black, or White

MODEL DETAILS

Model	Voltage	Door Swing	Finish	Shipping Weight
U-BI1215S-00A	115	Field Reversible	Stainless Solid	89 lbs
U-BI1215INT-00A	115	Field Reversible	Integrated Solid	89 lbs
U-BI1215B-00A	115	Field Reversible	Black Solid	89 lbs
U-BI1215W-00A	115	Field Reversible	White Solid	89 lbs

ACCESSORIES

Model	Description	Finish	Shipping Weight
23054	Professional Door Handle, 1 ¼” Diameter	Stainless	2 lbs
WATERHOOKUP	Braided water supply line kit	na	2 lbs

BI1215

1000 Series • 15” Crescent Ice Maker

DIMENSIONS

Dimensions shown apply to all finishes, including Integrated (INT) models with ¾” overlay panel/frame installed.

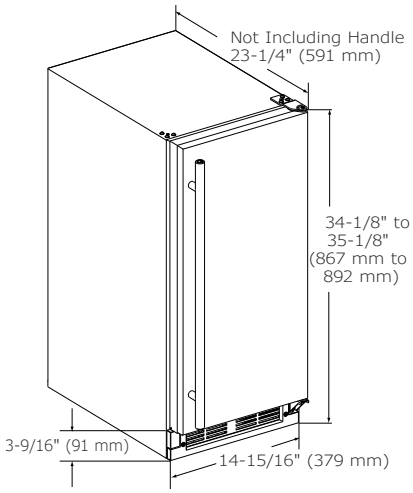

CABINET CUT-OUT

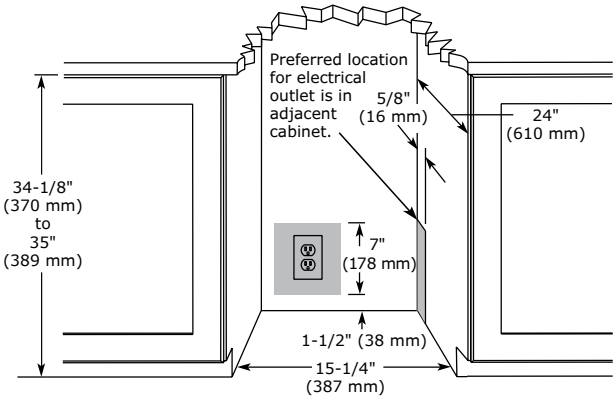

INSTALLATION NOTES

When installing adjacent to wall, ensure 2 ½” clearance on hinged side for 90° door opening, allowing ample room for door handle.
No additional clearance around sides, top or rear of unit is needed for ventilation.
Do not obstruct front grille air flow.

SPECIFICATIONS

Model	BI1215
Amps: Running	2.5
Control Type	On/Off Switch
Defrost Type	Manual
Dimensions: Product Depth	23 ¼" / 591 mm
Dimensions: Product Height	34 ⅛" / 867 mm
Dimensions: Product Width	14 15⁄16" / 379 mm
Energy Consumption: Avg. Per Year	na
ENERGY STAR	na
Ice Production Per Day	25 lbs
Ice Storage	25 lbs
Product Weight: Max	83 lbs
Refrigerant Type	R134a
Sabbath (Star K Certified)	No

ELECTRICAL REQUIREMENTS

This unit requires a grounded a polarized 115 VAC, 60 Hz, 15 A power supply (normal household current).

Please visit u-line.com to view this model’s User Guide.
All specifications are subject to change without notice.

Installed: 3036RRGLINT

Glass Door Refrigerators

	2218RGL	2224RGL	3018RGL	3024RGL	3036RRGL
	2000 Series		3000 Series		
Capacity: Bottle (12 oz)	79	114	79	114	158
Capacity: Can (12 oz)	123	172	123	172	246
Capacity: Volume (cu ft)	3.6	4.9	3.6	4.9	6.9
Control Type	Digital Touch Pad	Digital Touch Pad	U-Select®	U-Select®	U-Select®
Dimensions: Product Depth	23 7/16" / 590 mm	23 7/16" / 590 mm	23 7/16" / 590 mm	23 7/16" / 590 mm	23 7/16" / 590 mm
Dimensions: Product Height	33 11/16" / 856 mm	33 11/16" / 856 mm	33 11/16" / 856 mm	33 11/16" / 856 mm	33 11/16" / 856 mm
Dimensions: Product Width	17 3/4" / 450 mm	23 5/8" / 600 mm	17 3/4" / 450 mm	23 5/8" / 600 mm	35 7/16" / 900 mm
Door Swing	Right or Left	Right or Left	Right or Left	Right or Left	Double Doors
Energy Consumption: Avg. Per Year	290 kWh	300 kWh	290 kWh	300 kWh	320 kWh
ENERGY STAR	No	No	No	No	No
Finishes	Stainless Integrated	Stainless Integrated	Stainless Integrated	Stainless Integrated	Stainless Integrated
Lock Model Available	No	Yes	Yes	Yes	Yes
Sabbath (Star K Certified)	Yes	Yes	Yes	Yes	Yes
Temperature Range	34°F - 45°F	34°F - 45°F	34°F - 70°F	34°F - 70°F	34°F - 70°F
UL Listing	Residential	Residential	Residential	Residential	Residential

For ADA Series Glass Door Refrigerator data, see page 122.

2218RGL

18” Glass Door Refrigerator • 2000 Series

STAINLESS FRAME

INTEGRATED FRAME

FEATURES & BENEFITS

PERFORMANCE	• Volume of 3.6 cu ft holds up to 79 bottles (12 oz) or 123 cans (12 oz) • Digital Touch Pad Control is conveniently located on upper face of unit • Temperature range: 34°F - 45°F • Convection cooling system rapidly and efficiently takes items to the set temperature • Maintains temperature to within 1°F of the set point to maximize preservation
INTERIOR/EXTERIOR	• Black interior is illuminated with LED lighting that automatically turns off when the door is closed, or can be set to stay on for 3 hours • Four adjustable tempered glass shelves with 11 height positions • Full-extension, slide-out crisper drawer is removable for easy cleaning • LowE coated, argon gas filled thermopane glass door provides protection from harmful UV light • Standard commercial stainless steel handle is interchangeable with professional handle accessory • Must be ordered right-hand or left-hand hinged
INTEGRATION	• Robust, concealed and covered hinges with built-in door stop and closer • Integrated model requires ¾” custom door panel • Fixed grille can accept an overlay toe-kick • Four independently adjustable leveling legs provide a precise undercounter fit

MODEL DETAILS

Model	Voltage	Door Swing	Finish	Shipping Weight
U-2218RGLS-00A	115	Right-Hand Hinge	Stainless Frame	120 lbs
U-2218RGLS-01A	115	Left-Hand Hinge	Stainless Frame	120 lbs
U-2218RGLINT-00A	115	Right-Hand Hinge	Integrated Frame	118 lbs
U-2218RGLINT-01A	115	Left-Hand Hinge	Integrated Frame	118 lbs

ACCESSORIES

Model	Description	Finish	Shipping Weight
23054	Professional Door Handle, 1 ¼” Diameter	Stainless	2 lbs

2218RGL

2000 Series • 18” Glass Door Refrigerator

DIMENSIONS

Dimensions shown apply to all finishes, including Integrated (INT) models with ¾” overlay panel/frame installed.

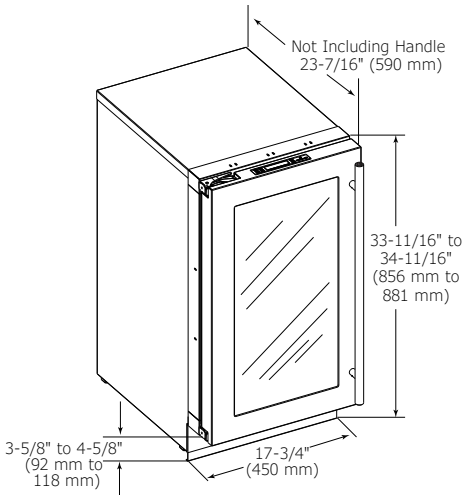

CABINET CUT-OUT

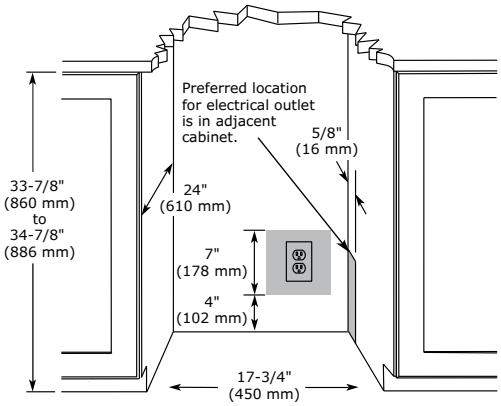

SPECIFICATIONS

Model	2218RGL
Amps: Running	1.2
Capacity: Bottle (12 oz)	79
Capacity: Can (12 oz)	123
Capacity: Volume (cu ft)	3.6
Control Type	Digital Touch Pad
Dimensions: Product Depth	23 7⁄16" / 590 mm
Dimensions: Product Height	33 11⁄16" / 856 mm
Dimensions: Product Width	17 ¾" / 450 mm
Energy Consumption: Avg. Per Year	290 kWh
ENERGY STAR	No
Product Weight: Max	111 lbs
Refrigerant Type	R600a
Sabbath (Star K Certified)	Yes
Temperature Range	34°F - 45°F

INSTALLATION NOTES

When installing adjacent to wall, ensure 2 ½” clearance on hinged side for 90° door opening, allowing ample room for door handle.
No additional clearance around sides, top or rear of unit is needed for ventilation.
Do not obstruct front grille air flow.

COOLING SYSTEM

ELECTRICAL REQUIREMENTS

This unit requires a grounded a polarized 115 VAC, 60 Hz, 15 A power supply (normal household current).

Residential

Please visit u-line.com to view this model’s User Guide.
All specifications are subject to change without notice.

2224RGL

24” Glass Door Refrigerator • 2000 Series

STAINLESS FRAME

STAINLESS FRAME (LOCK)

INTEGRATED FRAME

FEATURES & BENEFITS

PERFORMANCE	• Volume of 4.9 cu ft holds up to 114 bottles (12 oz) or 172 cans (12 oz) • Digital Touch Pad Control is conveniently located on upper face of unit • Temperature range: 34°F - 45°F • Convection cooling system rapidly and efficiently takes items to the set temperature • Maintains temperature to within 1°F of the set point to maximize preservation
INTERIOR/EXTERIOR	• Black interior is illuminated with LED lighting that automatically turns off when the door is closed, or can be set to stay on for 3 hours • Four adjustable tempered glass shelves with 11 height positions • Full-extension, slide-out crisper drawer is removable for easy cleaning • LowE coated, argon gas filled thermopane glass door provides protection from harmful UV light • Standard commercial stainless steel handle is interchangeable with professional handle accessory • Must be ordered right-hand or left-hand hinged
INTEGRATION	• Robust, concealed and covered hinges with built-in door stop and closer • Integrated model requires ¾” custom door panel • Fixed grille can accept an overlay toe-kick • Four independently adjustable leveling legs provide a precise undercounter fit

MODEL DETAILS

Model	Voltage	Door Swing	Finish	Shipping Weight
U-2224RGLS-00A	115	Right-Hand Hinge	Stainless Frame	145 lbs
U-2224RGLS-01A	115	Left-Hand Hinge	Stainless Frame	145 lbs
U-2224RGLS-13A	115	Right-Hand Hinge	Stainless Frame (Lock)	145 lbs
U-2224RGLS-15A	115	Left-Hand Hinge	Stainless Frame (Lock)	145 lbs
U-2224RGLINT-00A	115	Right-Hand Hinge	Integrated Frame	142 lbs
U-2224RGLINT-01A	115	Left-Hand Hinge	Integrated Frame	142 lbs

ACCESSORIES

Model	Description	Finish	Shipping Weight
23054	Professional Door Handle, 1 ¼” Diameter	Stainless	2 lbs

DIMENSIONS

Dimensions shown apply to all finishes, including Integrated (INT) models with ¾” overlay panel/frame installed.

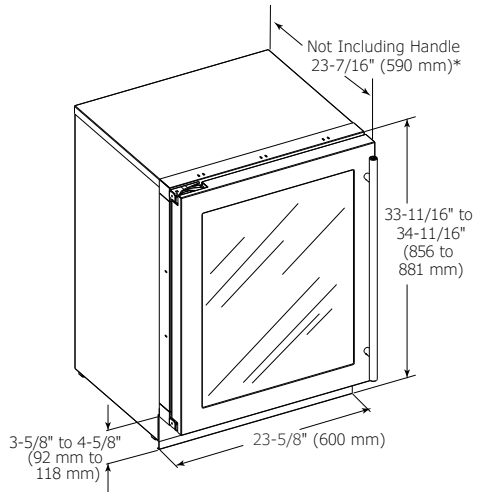

CABINET CUT-OUT

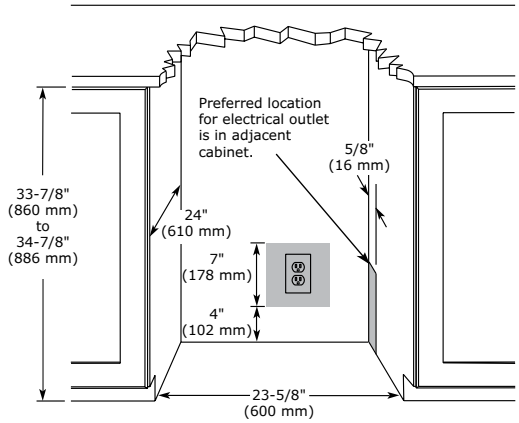

INSTALLATION NOTES

When installing adjacent to wall, ensure 2 ½” clearance on hinged side for 90° door opening, allowing ample room for door handle.
No additional clearance around sides, top or rear of unit is needed for ventilation.
Do not obstruct front grille air flow.

SPECIFICATIONS

Model	2224RGL
Amps: Running	1.2
Capacity: Bottle (12 oz)	114
Capacity: Can (12 oz)	172
Capacity: Volume (cu ft)	4.9
Control Type	Digital Touch Pad
Dimensions: Product Depth	23 7⁄16" / 590 mm
Dimensions: Product Height	33 11⁄16" / 856 mm
Dimensions: Product Width	23 5⁄8" / 600 mm
Energy Consumption: Avg. Per Year	300 kWh
ENERGY STAR	No
Product Weight: Max	135 lbs
Refrigerant Type	R600a
Sabbath (Star K Certified)	Yes
Temperature Range	34°F - 45°F

COOLING SYSTEM

ELECTRICAL REQUIREMENTS

This unit requires a grounded a polarized 115 VAC, 60 Hz, 15 A power supply (normal household current).

Residential

Please visit u-line.com to view this model’s User Guide.
All specifications are subject to change without notice.

3018RGL

18” Glass Door Refrigerator • Modular 3000 Series

STAINLESS FRAME

STAINLESS FRAME (LOCK)

INTEGRATED FRAME

FEATURES & BENEFITS

PERFORMANCE	• Volume of 3.6 cu ft holds up to 79 bottles (12 oz) or 123 cans (12 oz) • Temperature range: 34°F -70°F • Convection cooling system rapidly and efficiently takes items to the set temperature • U-Select® Control offers five distinct modes: Beverage: 34°F - 65°F, Deli: 34°F - 40°F, Market: 34°F - 40°F, Pantry: 34°F - 70°F, Root Cellar: 45°F - 55°F • U-Select® Control with digital OLED display is ergonomically located on top of door • Maintains temperature to within 1°F of the set point to maximize preservation
INTERIOR/EXTERIOR	• Black interior is illuminated with LED theater lighting that automatically turns off when the door is closed, or can be set to stay on for 3, 6, or 24 hours • Four adjustable tempered glass shelves with 11 height positions • Full-extension, slide-out crisper drawer is removable for easy cleaning • LowE coated, argon gas filled thermopane glass door provides protection from harmful UV light • Standard commercial stainless steel handle is interchangeable with professional handle accessory • Must be ordered right-hand or left-hand hinged
INTEGRATION	• Robust, concealed and covered hinges with built-in door stop and closer • Adjustable grille can be shifted front-to-back and up-and-down • Integrated model requires ¾” custom door panel • Grille can accept an overlay toe-kick • Four independently adjustable leveling legs; rear legs are adjustable from the front for ease of installation

MODEL DETAILS

Model	Voltage	Door Swing	Finish	Shipping Weight
U-3018RGLS-00A	115	Right-Hand Hinge	Stainless Frame	120 lbs
U-3018RGLS-01A	115	Left-Hand Hinge	Stainless Frame	120 lbs
U-3018RGLS-13A	115	Right-Hand Hinge	Stainless Frame (Lock)	120 lbs
U-3018RGLS-15A	115	Left-Hand Hinge	Stainless Frame (Lock)	120 lbs
U-3018RGLINT-00A	115	Right-Hand Hinge	Integrated Frame	118 lbs
U-3018RGLINT-01A	115	Left-Hand Hinge	Integrated Frame	118 lbs

ACCESSORIES

Model	Description	Finish	Shipping Weight
23054	Professional Door Handle, 1 ¼” Diameter	Stainless	2 lbs

3018RGL

Modular 3000 Series • 18” Glass Door Refrigerator

DIMENSIONS

Dimensions shown apply to all finishes, including Integrated (INT) models with ¾” overlay panel/frame installed.

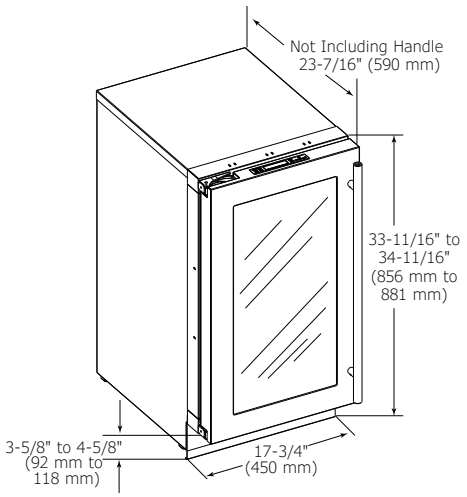

CABINET CUT-OUT

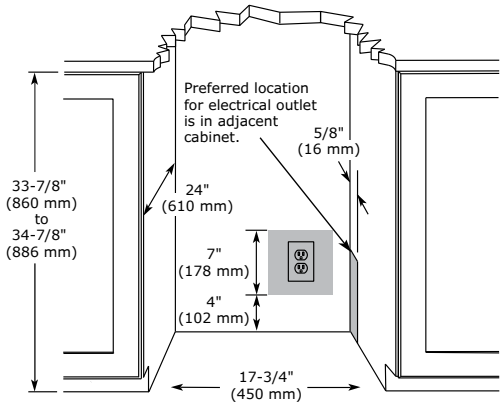

SPECIFICATIONS

Model	3018RGL
Amps: Running	1.2
Capacity: Bottle (12 oz)	79
Capacity: Can (12 oz)	123
Capacity: Volume (cu ft)	3.6
Control Type	U-Select®
Dimensions: Product Depth	23 7⁄16" / 590 mm
Dimensions: Product Height	33 11⁄16" / 856 mm
Dimensions: Product Width	17 ¾" / 450 mm
Energy Consumption: Avg. Per Year	290 kWh
ENERGY STAR	No
Product Weight: Max	111 lbs
Refrigerant Type	R600a
Sabbath (Star K Certified)	Yes
Temperature Range	34°F - 70°F

INSTALLATION NOTES

When installing adjacent to wall, ensure 2 ½” clearance on hinged side for 90° door opening, allowing ample room for door handle.
No additional clearance around sides, top or rear of unit is needed for ventilation.
Do not obstruct front grille air flow.

COOLING SYSTEM

ELECTRICAL REQUIREMENTS

This unit requires a grounded a polarized 115 VAC, 60 Hz, 15 A power supply (normal household current).

Residential

Please visit u-line.com to view this model’s User Guide.
All specifications are subject to change without notice.

3024RGL

24” Glass Door Refrigerator • Modular 3000 Series

STAINLESS FRAME

STAINLESS FRAME (LOCK)

INTEGRATED FRAME

FEATURES & BENEFITS

PERFORMANCE	• Volume of 4.9 cu ft holds up to 114 bottles (12 oz) or 172 cans (12 oz) • Temperature range: 34°F -70°F • Convection cooling system rapidly and efficiently takes items to the set temperature • U-Select® Control offers five distinct modes: Beverage: 34°F - 65°F, Deli: 34°F - 40°F, Market: 34°F - 40°F, Pantry: 34°F - 70°F, Root Cellar: 45°F - 55°F • U-Select® Control with digital OLED display is ergonomically located on top of door • Maintains temperature to within 1°F of the set point to maximize preservation
INTERIOR/EXTERIOR	• Black interior is illuminated with LED theater lighting that automatically turns off when the door is closed, or can be set to stay on for 3, 6, or 24 hours • Four adjustable tempered glass shelves with 11 height positions • Full-extension, slide-out crisper drawer is removable for easy cleaning • LowE coated, argon gas filled thermopane glass door provides protection from harmful UV light • Standard commercial stainless steel handle is interchangeable with professional handle accessory • Must be ordered right-hand or left-hand hinged
INTEGRATION	• Robust, concealed and covered hinges with built-in door stop and closer • Adjustable grille can be shifted front-to-back and up-and-down • Integrated model requires ¾” custom door panel • Grille can accept an overlay toe-kick • Four independently adjustable leveling legs; rear legs are adjustable from the front for ease of installation

MODEL DETAILS

Model	Voltage	Door Swing	Finish	Shipping Weight
U-3024RGLS-00A	115	Right-Hand Hinge	Stainless Frame	145 lbs
U-3024RGLS-01A	115	Left-Hand Hinge	Stainless Frame	145 lbs
U-3024RGLS-13A	115	Right-Hand Hinge	Stainless Frame (Lock)	145 lbs
U-3024RGLS-15A	115	Left-Hand Hinge	Stainless Frame (Lock)	145 lbs
U-3024RGLINT-00A	115	Right-Hand Hinge	Integrated Frame	142 lbs
U-3024RGLINT-01A	115	Left-Hand Hinge	Integrated Frame	142 lbs

ACCESSORIES

Model	Description	Finish	Shipping Weight
23054	Professional Door Handle, 1 ¼” Diameter	Stainless	2 lbs

3024RGL

Modular 3000 Series • 24” Glass Door Refrigerator

DIMENSIONS

Dimensions shown apply to all finishes, including Integrated (INT) models with ¾” overlay panel/frame installed.

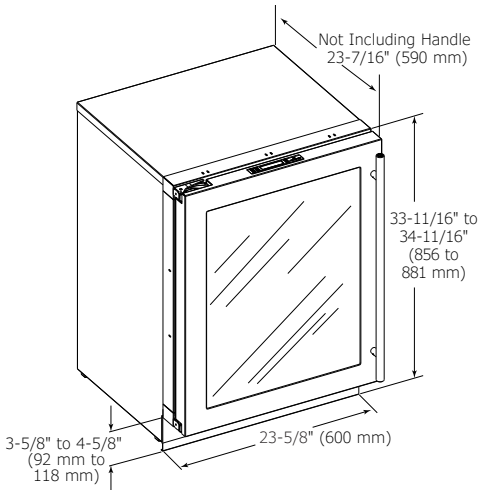

CABINET CUT-OUT

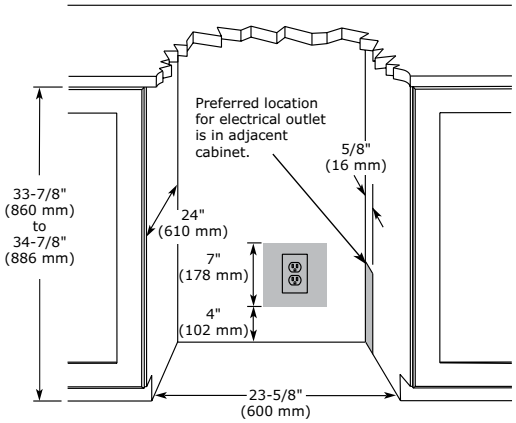

SPECIFICATIONS

Model	3024RGL
Amps: Running	1.2
Capacity: Bottle (12 oz)	114
Capacity: Can (12 oz)	172
Capacity: Volume (cu ft)	4.9
Control Type	U-Select®
Dimensions: Product Depth	23 7⁄16" / 590 mm
Dimensions: Product Height	33 11⁄16" / 856 mm
Dimensions: Product Width	23 5⁄8" / 600 mm
Energy Consumption: Avg. Per Year	300 kWh
ENERGY STAR	No
Product Weight: Max	135 lbs
Refrigerant Type	R600a
Sabbath (Star K Certified)	Yes
Temperature Range	34°F - 70°F

INSTALLATION NOTES

When installing adjacent to wall, ensure 2 ½” clearance on hinged side for 90° door opening, allowing ample room for door handle.
No additional clearance around sides, top or rear of unit is needed for ventilation.
Do not obstruct front grille air flow.

COOLING SYSTEM

ELECTRICAL REQUIREMENTS

This unit requires a grounded a polarized 115 VAC, 60 Hz, 15 A power supply (normal household current).

Residential

Please visit u-line.com to view this model’s User Guide.
All specifications are subject to change without notice.

3036RRGL

36” Glass Door Refrigerator • Modular 3000 Series

STAINLESS FRAME

STAINLESS FRAME (LOCK)

INTEGRATED FRAME

FEATURES & BENEFITS

PERFORMANCE	• Volume of 6.9 cu ft holds up to 158 bottles (12 oz) or 246 cans (12 oz) • Temperature range: 34°F -70°F • Convection cooling system rapidly and efficiently takes items to the set temperature • U-Select® Control offers five distinct modes: Beverage: 34°F - 65°F, Deli: 34°F - 40°F, Market: 34°F - 40°F, Pantry: 34°F - 70°F, Root Cellar: 45°F - 55°F • U-Select® Control with digital OLED display is ergonomically located on top of door • Maintains temperature to within 1°F of the set point to maximize preservation • Independently controlled dual-zones
INTERIOR/EXTERIOR	• Black interior is illuminated with LED theater lighting that automatically turns off when the door is closed, or can be set to stay on for 3, 6, or 24 hours • Four adjustable tempered glass shelves with 11 height positions in each compartment • Full-extension, slide-out crisper drawers are removable for easy cleaning • LowE coated, argon gas filled thermopane glass door provides protection from harmful UV light • Standard commercial stainless steel handle are interchangeable with professional handle accessory
INTEGRATION	• Robust, concealed and covered hinges with built-in door stop and closer • Adjustable grille can be shifted front-to-back and up-and-down • Integrated model requires ¾” custom door panel • Grille can accept an overlay toe-kick • Four independently adjustable leveling legs; rear legs are adjustable from the front for ease of installation

MODEL DETAILS

Model	Voltage	Door Swing	Finish	Shipping Weight
U-3036RRGLS-00A	115	Double Doors	Stainless Frame	229 lbs
U-3036RRGLS-13A	115	Double Doors	Stainless Frame (Lock)	229 lbs
U-3036RRGLINT-00A	115	Double Doors	Integrated Frame	217 lbs

ACCESSORIES

Model	Description	Finish	Shipping Weight
23054	Professional Door Handle, 1 ¼” Diameter	Stainless	2 lbs

3036RRGL

Modular 3000 Series • 36” Glass Door Refrigerator

DIMENSIONS

Dimensions shown apply to all finishes, including Integrated (INT) models with ¾” overlay panel/frame installed.

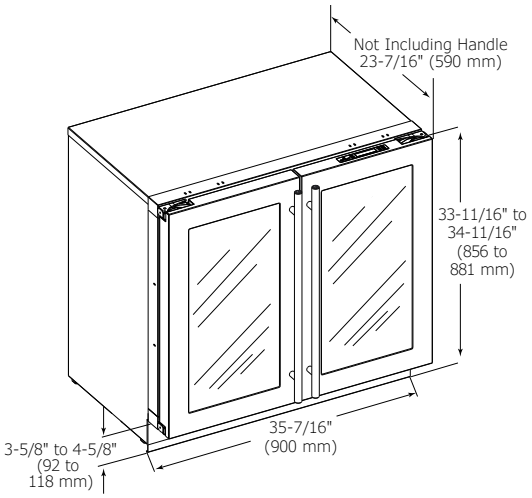

CABINET CUT-OUT

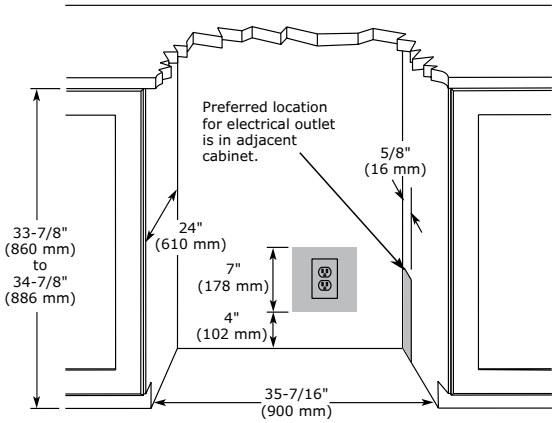

SPECIFICATIONS

Model	3036RRGL
Amps: Running	1.2
Capacity: Bottle (12 oz)	158
Capacity: Can (12 oz)	246
Capacity: Volume (cu ft)	6.9
Control Type	U-Select®
Dimensions: Product Depth	23 7⁄16" / 590 mm
Dimensions: Product Height	33 11⁄16" / 856 mm
Dimensions: Product Width	35 7⁄16" / 900 mm
Energy Consumption: Avg. Per Year	320 kWh
ENERGY STAR	No
Product Weight: Max	203 lbs
Refrigerant Type	R600a
Sabbath (Star K Certified)	Yes
Temperature Range	34°F - 70°F

INSTALLATION NOTES

When installing adjacent to wall, ensure 2 ½” clearance on hinged side for 90° door opening, allowing ample room for door handle.
No additional clearance around sides, top or rear of unit is needed for ventilation.
Do not obstruct front grille air flow.

COOLING SYSTEM

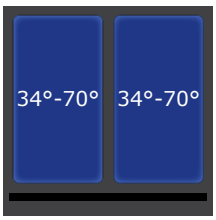

ELECTRICAL REQUIREMENTS

This unit requires a grounded a polarized 115 VAC, 60 Hz, 15 A power supply (normal household current).

Residential

Please visit u-line.com to view this model’s User Guide.
All specifications are subject to change without notice.

Installed: 3036RRINT

Solid Door Refrigerators

	1215R	1224R	2218R	2224R	3018R	3024R	3036RR
	1000 Series		2000 Series		3000 Series		
Capacity: Bottle (12 oz)	57	123	79	114	68	100	136
Capacity: Can (12 oz)	92	185	123	172	104	141	208
Capacity: Volume (cu ft)	2.9	5.2	3.4	4.9	3.4	4.9	6.9
Control Type	Digital Touch Pad	Digital Touch Pad	Digital Touch Pad	Digital Touch Pad	U-Select®	U-Select®	U-Select®
Dimensions: Product Depth	23 ¼" / 591 mm	23 ¼" / 591 mm	23 7⁄16" / 590 mm	23 7⁄16" / 590 mm	23 7⁄16" / 590 mm	23 7⁄16" / 590 mm	23 7⁄16" / 590 mm
Dimensions: Product Height	34 ⅛" / 867 mm	34 ⅛" / 867 mm	33 11⁄16" / 856 mm	33 11⁄16" / 856 mm	33 11⁄16" / 856 mm	33 11⁄16" / 856 mm	33 11⁄16" / 856 mm
Dimensions: Product Width	14 15⁄16" / 379 mm*	24" / 610 mm*	17 ¾" / 450 mm	23 ⅝" / 600 mm	17 ¾" / 450 mm	23 ⅝" / 600 mm	35 7⁄16" / 900 mm
Door Swing	Field Reversible	Field Reversible	Right or Left	Right or Left	Right or Left	Right or Left	Double Doors
Energy Consumption: Avg. Per Year	225 kWh	240 kWh	230 kWh	240 kWh	245 kWh	240 kWh	320 kWh
ENERGY STAR	ENERGY STAR	ENERGY STAR	ENERGY STAR	ENERGY STAR	ENERGY STAR	ENERGY STAR	No
Finishes	Stainless Integrated Black	Stainless Integrated Black White	Stainless Integrated	Stainless Integrated	Stainless Integrated	Stainless Integrated	Stainless Integrated
Lock Model Available	No	No	No	No	No	No	No
Sabbath (Star K Certified)	Yes	Yes	Yes	Yes	Yes	Yes	Yes
Temperature Range	34°F - 45°F	34°F - 45°F	34°F - 45°F	34°F - 45°F	34°F - 70°F	34°F - 70°F	34°F - 70°F
UL Listing	Residential / Commercial	Residential / Commercial	Residential	Residential	Residential	Residential	Residential

*The cutout requires an additional ¼" width overall to ensure proper installation.

For ADA Series Solid Door Refrigerator data, see page 116, 120.
For Outdoor Series Solid Door Refrigerator data, see page 130, 132.

1215R

15” Solid Door Refrigerator • 1000 Series

STAINLESS SOLID

INTEGRATED SOLID

BLACK SOLID

FEATURES & BENEFITS

PERFORMANCE	• Volume of 2.9 cu ft holds up to 57 bottles (12 oz) or 92 cans (12 oz) • Digital Touch Pad Control is conveniently located on upper face of unit • Temperature range: 34°F - 45°F • Maintains temperature to within 1°F of the set point to maximize preservation
INTERIOR/EXTERIOR	• White interior is illuminated with LED lighting • Three removable tempered glass shelves • Standard commercial stainless steel handle is interchangeable with professional handle accessory • Door swing is field reversible
INTEGRATION	• Unit is designed to be built-in or can be freestanding • Integrated model requires ¾” custom door panel • Four independently adjustable leveling legs provide a precise undercounter fit • Available in the following finishes: Stainless, Integrated & Black

MODEL DETAILS

Model	Voltage	Door Swing	Finish	Shipping Weight
U-1215RS-00A	115	Field Reversible	Stainless Solid	83 lbs
U-1215RINT-00A	115	Field Reversible	Integrated Solid	80 lbs
U-1215RB-00A	115	Field Reversible	Black Solid	83 lbs

ACCESSORIES

Model	Description	Finish	Shipping Weight
23054	Professional Door Handle, 1 ¼” Diameter	Stainless	2 lbs

1215R

1000 Series • 15” Solid Door Refrigerator

DIMENSIONS

Dimensions shown apply to all finishes, including Integrated (INT) models with ¾” overlay panel/frame installed.

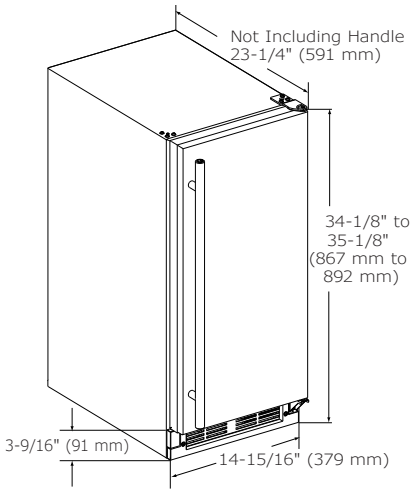

CABINET CUT-OUT

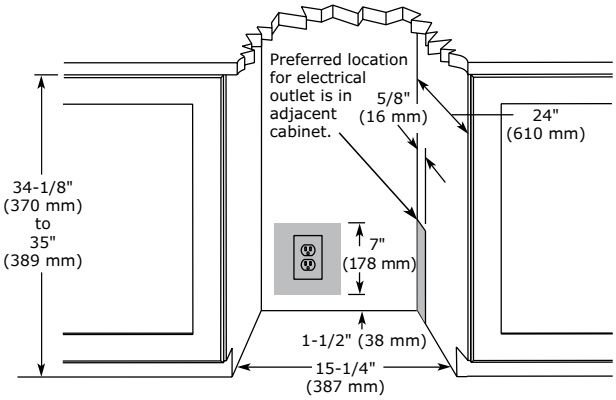

SPECIFICATIONS

Model	1215R
Amps: Running	1.2
Capacity: Bottle (12 oz)	57
Capacity: Can (12 oz)	92
Capacity: Volume (cu ft)	2.9
Control Type	Digital Touch Pad
Dimensions: Product Depth	23 ¼" / 591 mm
Dimensions: Product Height	34 ⅛" / 867 mm
Dimensions: Product Width	14 15⁄16" / 379 mm
Energy Consumption: Avg. Per Year	225 kWh
ENERGY STAR	ENERGY STAR
Product Weight: Max	76 lbs
Refrigerant Type	R600a
Sabbath (Star K Certified)	Yes
Temperature Range	34°F - 45°F

INSTALLATION NOTES

When installing adjacent to wall, ensure 2 ½” clearance on hinged side for 90° door opening, allowing ample room for door handle.
Cutout includes the additional ¼” width overall to ensure proper installation.
No additional clearance around sides, top or rear of unit is needed for ventilation.
Do not obstruct front grille air flow.

COOLING SYSTEM

ELECTRICAL REQUIREMENTS

This unit requires a grounded a polarized 115 VAC, 60 Hz, 15 A power supply (normal household current).

Residential & Commercial

Please visit u-line.com to view this model’s User Guide.
All specifications are subject to change without notice.

1224R

24” Solid Door Refrigerator • 1000 Series

STAINLESS SOLID

INTEGRATED SOLID

BLACK SOLID

WHITE SOLID

FEATURES & BENEFITS

PERFORMANCE	• Volume of 5.2 cu ft holds up to 123 bottles (12 oz) or 185 cans (12 oz) • Digital Touch Pad Control is conveniently located on upper face of unit • Temperature range: 34°F - 45°F • Maintains temperature to within 1°F of the set point to maximize preservation
INTERIOR/EXTERIOR	• White interior is illuminated with LED lighting • Three removable tempered glass shelves • Standard commercial stainless steel handle is interchangeable with professional handle accessory • Door swing is field reversible
INTEGRATION	• Unit is designed to be built-in or can be freestanding with the freestanding accessory kit • Integrated model requires ¾” custom door panel • Four independently adjustable leveling legs provide a precise undercounter fit • Available in the following finishes: Stainless, Integrated, Black, or White

MODEL DETAILS

Model	Voltage	Door Swing	Finish	Shipping Weight
U-1224RS-00A	115	Field Reversible	Stainless Solid	109 lbs
U-1224RINT-00A	115	Field Reversible	Integrated Solid	106 lbs
U-1224RB-00A	115	Field Reversible	Black Solid	109 lbs
U-1224RW-00A	115	Field Reversible	White Solid	109 lbs

ACCESSORIES

Model	Description	Finish	Shipping Weight
23054	Professional Door Handle, 1 ¼” Diameter	Stainless	2 lbs
U-FSK-B	Freestanding Kit	Black	3 lbs

1224R

1000 Series • 24” Solid Door Refrigerator

DIMENSIONS

Dimensions shown apply to all finishes, including Integrated (INT) models with ¾” overlay panel/frame installed.

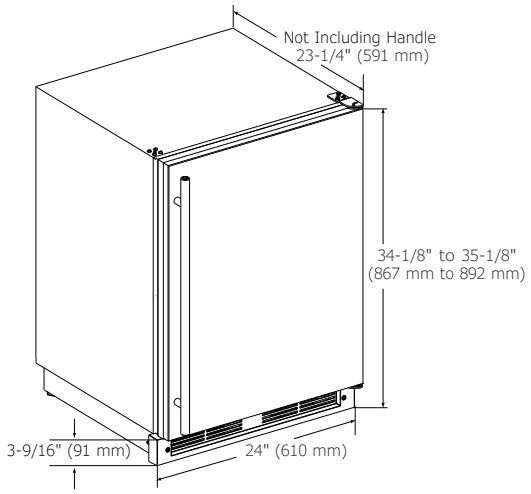

CABINET CUT-OUT

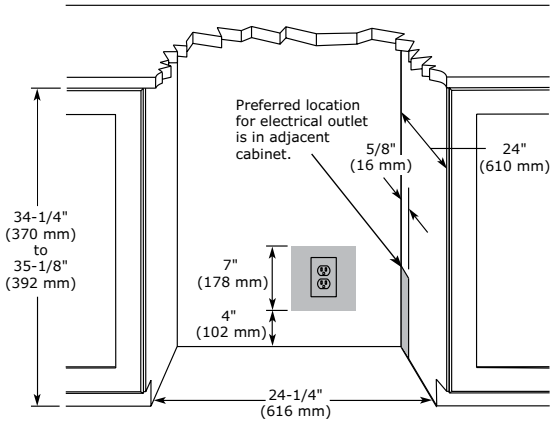

SPECIFICATIONS

Model	1224R
Amps: Running	1.2
Capacity: Bottle (12 oz)	123
Capacity: Can (12 oz)	185
Capacity: Volume (cu ft)	5.2
Control Type	Digital Touch Pad
Dimensions: Product Depth	23 ¼" / 591 mm
Dimensions: Product Height	34 ⅛" / 867 mm
Dimensions: Product Width	24" / 610 mm
Energy Consumption: Avg. Per Year	240 kWh
ENERGY STAR	ENERGY STAR
Product Weight: Max	99 lbs
Refrigerant Type	R600a
Sabbath (Star K Certified)	Yes
Temperature Range	34°F - 45°F

INSTALLATION NOTES

When installing adjacent to wall, ensure 2 ½” clearance on hinged side for 90° door opening, allowing ample room for door handle.
Cutout includes the additional ¼” width overall to ensure proper installation.
No additional clearance around sides, top or rear of unit is needed for ventilation.
Do not obstruct front grille air flow.

COOLING SYSTEM

ELECTRICAL REQUIREMENTS

This unit requires a grounded a polarized 115 VAC, 60 Hz, 15 A power supply (normal household current).

Residential & Commercial

Please visit u-line.com to view this model’s User Guide.
All specifications are subject to change without notice.

2218R

18” Solid Door Refrigerator • 2000 Series

STAINLESS
SOLID

INTEGRATED
SOLID

FEATURES & BENEFITS

PERFORMANCE	• Volume of 3.4 cu ft holds up to 79 bottles (12 oz) or 123 cans (12 oz) • Digital Touch Pad Control is conveniently located on upper face of unit • Temperature range: 34°F - 45°F • Convection cooling system rapidly and efficiently takes items to the set temperature • Maintains temperature to within 1°F of the set point to maximize preservation
INTERIOR/EXTERIOR	• Black interior is illuminated with LED Lighting • Four adjustable tempered glass shelves with 11 height positions • Full-extension, slide-out crisper drawer is removable for easy cleaning • Standard commercial stainless steel handle is interchangeable with professional handle accessory • Must be ordered right-hand or left-hand hinged
INTEGRATION	• Robust, concealed and covered hinges with built-in door stop and closer • Integrated model requires ¾” custom door panel • Fixed grille can accept an overlay toe-kick • Four independently adjustable leveling legs provide a precise undercounter fit

MODEL DETAILS

Model	Voltage	Door Swing	Finish	Shipping Weight
U-2218RS-00A	115	Right-Hand Hinge	Stainless Solid	119 lbs
U-2218RS-01A	115	Left-Hand Hinge	Stainless Solid	119 lbs
U-2218RINT-00A	115	Right-Hand Hinge	Integrated Solid	116 lbs
U-2218RINT-01A	115	Left-Hand Hinge	Integrated Solid	116 lbs

ACCESSORIES

Model	Description	Finish	Shipping Weight
23054	Professional Door Handle, 1 ¼” Diameter	Stainless	2 lbs

DIMENSIONS

Dimensions shown apply to all finishes, including Integrated (INT) models with ¾” overlay panel/frame installed.

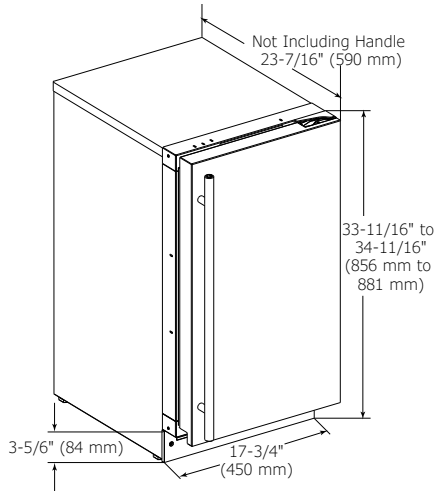

CABINET CUT-OUT

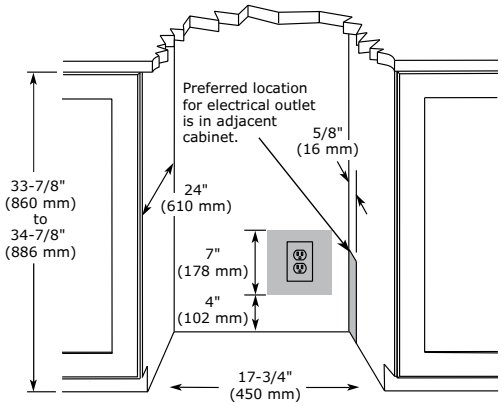

INSTALLATION NOTES

When installing adjacent to wall, ensure 2 ½” clearance on hinged side for 90° door opening, allowing ample room for door handle.
No additional clearance around sides, top or rear of unit is needed for ventilation.
Do not obstruct front grille air flow.

SPECIFICATIONS

Model	2218R
Amps: Running	1.2
Capacity: Bottle (12 oz)	79
Capacity: Can (12 oz)	123
Capacity: Volume (cu ft)	3.4
Control Type	Digital Touch Pad
Dimensions: Product Depth	23 7⁄16" / 590 mm
Dimensions: Product Height	33 11⁄16" / 856 mm
Dimensions: Product Width	17 ¾" / 450 mm
Energy Consumption: Avg. Per Year	230 kWh
ENERGY STAR	ENERGY STAR
Product Weight: Max	110 lbs
Refrigerant Type	R600a
Sabbath (Star K Certified)	Yes
Temperature Range	34°F - 45°F

COOLING SYSTEM

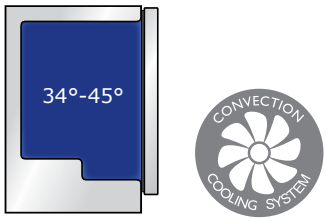

ELECTRICAL REQUIREMENTS

This unit requires a grounded a polarized 115 VAC, 60 Hz, 15 A power supply (normal household current).

Residential

Please visit u-line.com to view this model’s User Guide.
All specifications are subject to change without notice.

2224R

24” Solid Door Refrigerator • 2000 Series

STAINLESS
SOLID

INTEGRATED
SOLID

FEATURES & BENEFITS

PERFORMANCE	• Volume of 4.9 cu ft holds up to 114 bottles (12 oz) or 172 cans (12 oz) • Digital Touch Pad Control is conveniently located on upper face of unit • Temperature range: 34°F - 45°F • Convection cooling system rapidly and efficiently takes items to the set temperature • Maintains temperature to within 1°F of the set point to maximize preservation
INTERIOR/EXTERIOR	• Black interior is illuminated with LED Lighting • Four adjustable tempered glass shelves with 11 height positions • Full-extension, slide-out crisper drawer is removable for easy cleaning • Standard commercial stainless steel handle is interchangeable with professional handle accessory • Must be ordered right-hand or left-hand hinged
INTEGRATION	• Robust, concealed and covered hinges with built-in door stop and closer • Integrated model requires ¾” custom door panel • Fixed grille can accept an overlay toe-kick • Four independently adjustable leveling legs provide a precise undercounter fit

MODEL DETAILS

Model	Voltage	Door Swing	Finish	Shipping Weight
U-2224RS-00A	115	Right-Hand Hinge	Stainless Solid	144 lbs
U-2224RS-01A	115	Left-Hand Hinge	Stainless Solid	144 lbs
U-2224RINT-00A	115	Right-Hand Hinge	Integrated Solid	132 lbs
U-2224RINT-01A	115	Left-Hand Hinge	Integrated Solid	132 lbs

ACCESSORIES

Model	Description	Finish	Shipping Weight
23054	Professional Door Handle, 1 ¼” Diameter	Stainless	2 lbs

DIMENSIONS

Dimensions shown apply to all finishes, including Integrated (INT) models with ¾” overlay panel/frame installed.

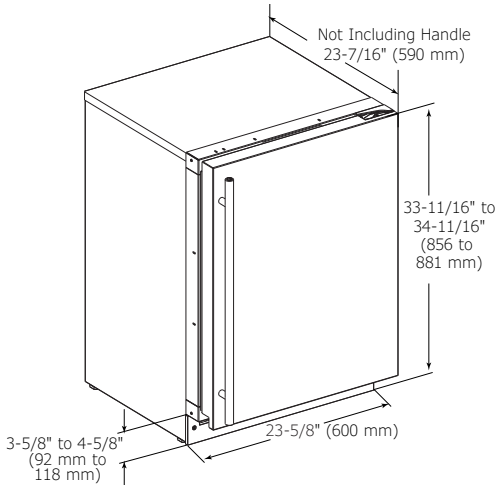

CABINET CUT-OUT

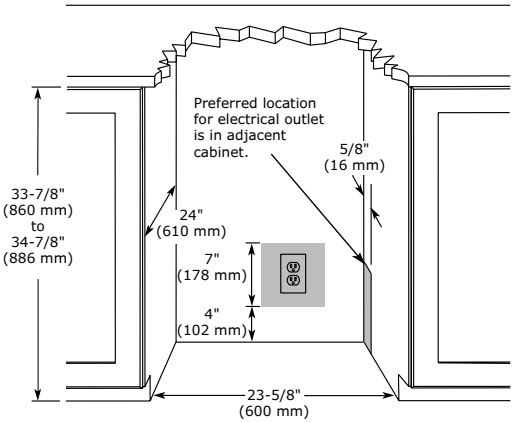

INSTALLATION NOTES

When installing adjacent to wall, ensure 2 ½” clearance on hinged side for 90° door opening, allowing ample room for door handle.
No additional clearance around sides, top or rear of unit is needed for ventilation.
Do not obstruct front grille air flow.

SPECIFICATIONS

Model	2224R
Amps: Running	1.2
Capacity: Bottle (12 oz)	114
Capacity: Can (12 oz)	172
Capacity: Volume (cu ft)	4.9
Control Type	Digital Touch Pad
Dimensions: Product Depth	23 7⁄16" / 590 mm
Dimensions: Product Height	33 11⁄16" / 856 mm
Dimensions: Product Width	23 5⁄8" / 600 mm
Energy Consumption: Avg. Per Year	240 kWh
ENERGY STAR	ENERGY STAR
Product Weight: Max	134 lbs
Refrigerant Type	R600a
Sabbath (Star K Certified)	Yes
Temperature Range	34°F - 45°F

COOLING SYSTEM

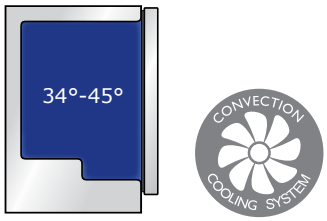

ELECTRICAL REQUIREMENTS

This unit requires a grounded a polarized 115 VAC, 60 Hz, 15 A power supply (normal household current).

Residential

Please visit u-line.com to view this model’s User Guide.
All specifications are subject to change without notice.

3018R

18” Solid Door Refrigerator • Modular 3000 Series

STAINLESS SOLID

INTEGRATED SOLID

FEATURES & BENEFITS

PERFORMANCE	• Volume of 3.4 cu ft holds up to 68 bottles (12 oz) or 104 cans (12 oz) • Temperature range: 34°F -70°F • Convection cooling system rapidly and efficiently takes items to the set temperature • U-Select® Control offers five distinct modes: Beverage: 34°F - 65°F, Deli: 34°F - 40°F, Market: 34°F - 40°F, Pantry: 34°F - 70°F, Root Cellar: 45°F - 55°F • U-Select® Control with digital OLED display is ergonomically located on top of door • Maintains temperature to within 1°F of the set point to maximize preservation
INTERIOR/EXTERIOR	• Black interior is illuminated with LED theater lighting • Three full-extension, slide-out drawers are removable for easy cleaning • The middle bin has two possible positions and comes with a removable glass shelf to keep products stable • The lower bin is large enough to fit 2 one-gallon containers with additional space for more storage • Standard commercial stainless steel handle is interchangeable with professional handle accessory • Must be ordered right-hand or left-hand hinged
INTEGRATION	• Robust, concealed and covered hinges with built-in door stop and closer • Adjustable grille can be shifted front-to-back and up-and-down • Integrated model requires ¾” custom door panel • Grille can accept an overlay toe-kick • Four independently adjustable leveling legs; rear legs are adjustable from the front for ease of installation

MODEL DETAILS

Model	Voltage	Door Swing	Finish	Shipping Weight
U-3018RS-00A	115	Right-Hand Hinge	Stainless Solid	124 lbs
U-3018RS-01A	115	Left-Hand Hinge	Stainless Solid	124 lbs
U-3018RINT-00A	115	Right-Hand Hinge	Integrated Solid	120 lbs
U-3018RINT-01A	115	Left-Hand Hinge	Integrated Solid	120 lbs

ACCESSORIES

Model	Description	Finish	Shipping Weight
23054	Professional Door Handle, 1 ¼” Diameter	Stainless	2 lbs

3018R

Modular 3000 Series • 18” Solid Door Refrigerator

DIMENSIONS

Dimensions shown apply to all finishes, including Integrated (INT) models with ¾” overlay panel/frame installed.

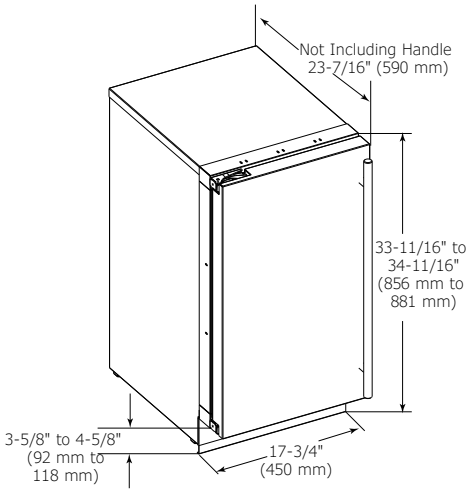

CABINET CUT-OUT

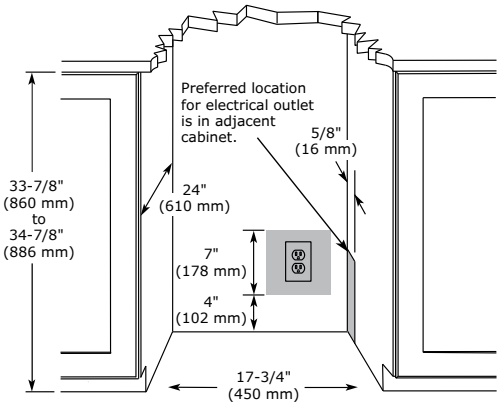

SPECIFICATIONS

Model	3018R
Amps: Running	1.2
Capacity: Bottle (12 oz)	68
Capacity: Can (12 oz)	104
Capacity: Volume (cu ft)	3.4
Control Type	U-Select®
Dimensions: Product Depth	23 7⁄16" / 590 mm
Dimensions: Product Height	33 11⁄16" / 856 mm
Dimensions: Product Width	17 ¾" / 450 mm
Energy Consumption: Avg. Per Year	245 kWh
ENERGY STAR	ENERGY STAR
Product Weight: Max	114 lbs
Refrigerant Type	R600a
Sabbath (Star K Certified)	Yes
Temperature Range	34°F - 70°F

INSTALLATION NOTES

When installing adjacent to wall, ensure 2 ½” clearance on hinged side for 90° door opening, allowing ample room for door handle.
No additional clearance around sides, top or rear of unit is needed for ventilation.
Do not obstruct front grille air flow.

COOLING SYSTEM

ELECTRICAL REQUIREMENTS

This unit requires a grounded a polarized 115 VAC, 60 Hz, 15 A power supply (normal household current).

Residential

Please visit u-line.com to view this model’s User Guide.
All specifications are subject to change without notice.

3024R

24” Solid Door Refrigerator • Modular 3000 Series

STAINLESS
SOLID

INTEGRATED
SOLID

FEATURES & BENEFITS

PERFORMANCE	• Volume of 4.9 cu ft holds up to 100 bottles (12 oz) or 141 cans (12 oz) • Temperature range: 34°F -70°F • Convection cooling system rapidly and efficiently takes items to the set temperature • U-Select® Control offers five distinct modes: Beverage: 34°F - 65°F, Deli: 34°F - 40°F, Market: 34°F - 40°F, Pantry: 34°F - 70°F, Root Cellar: 45°F - 55°F • U-Select® Control with digital OLED display is ergonomically located on top of door • Maintains temperature to within 1°F of the set point to maximize preservation
INTERIOR/EXTERIOR	• Black interior is illuminated with LED theater lighting • Three full-extension, slide-out drawers are removable for easy cleaning • The middle bin has two possible positions and comes with a removable glass shelf to keep products stable • The lower bin is large enough to fit 2 one-gallon containers with additional space for more storage • Standard commercial stainless steel handle is interchangeable with professional handle accessory • Must be ordered right-hand or left-hand hinged
INTEGRATION	• Robust, concealed and covered hinges with built-in door stop and closer • Adjustable grille can be shifted front-to-back and up-and-down • Integrated model requires ¾” custom door panel • Grille can accept an overlay toe-kick • Four independently adjustable leveling legs; rear legs are adjustable from the front for ease of installation

MODEL DETAILS

Model	Voltage	Door Swing	Finish	Shipping Weight
U-3024RS-00A	115	Right-Hand Hinge	Stainless Solid	146 lbs
U-3024RS-01A	115	Left-Hand Hinge	Stainless Solid	146 lbs
U-3024RINT-00A	115	Right-Hand Hinge	Integrated Solid	138 lbs
U-3024RINT-01A	115	Left-Hand Hinge	Integrated Solid	138 lbs

ACCESSORIES

Model	Description	Finish	Shipping Weight
23054	Professional Door Handle, 1 ¼” Diameter	Stainless	2 lbs

DIMENSIONS

Dimensions shown apply to all finishes, including Integrated (INT) models with ¾” overlay panel/frame installed.

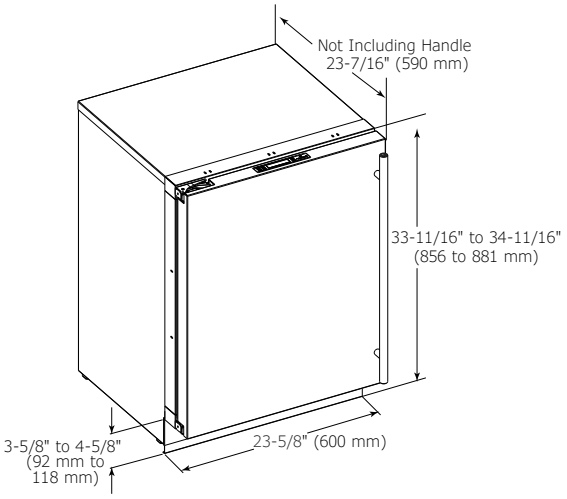

CABINET CUT-OUT

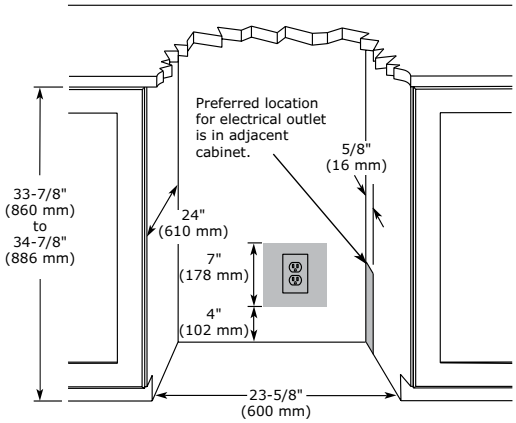

SPECIFICATIONS

Model	3024R
Amps: Running	1.2
Capacity: Bottle (12 oz)	100
Capacity: Can (12 oz)	141
Capacity: Volume (cu ft)	4.9
Control Type	U-Select®
Dimensions: Product Depth	23 7⁄16" / 590 mm
Dimensions: Product Height	33 11⁄16" / 856 mm
Dimensions: Product Width	23 5⁄8" / 600 mm
Energy Consumption: Avg. Per Year	240 kWh
ENERGY STAR	ENERGY STAR
Product Weight: Max	136 lbs
Refrigerant Type	R600a
Sabbath (Star K Certified)	Yes
Temperature Range	34°F - 70°F

INSTALLATION NOTES

When installing adjacent to wall, ensure 2 ½” clearance on hinged side for 90° door opening, allowing ample room for door handle.
No additional clearance around sides, top or rear of unit is needed for ventilation.
Do not obstruct front grille air flow.

COOLING SYSTEM

ELECTRICAL REQUIREMENTS

This unit requires a grounded a polarized 115 VAC, 60 Hz, 15 A power supply (normal household current).

Residential

Please visit u-line.com to view this model’s User Guide.
All specifications are subject to change without notice.

3036RR

36” Solid Door Refrigerator • Modular 3000 Series

STAINLESS
SOLID

INTEGRATED
SOLID

FEATURES & BENEFITS

PERFORMANCE	• Volume of 6.9 cu ft holds up to 136 bottles (12 oz) or 208 cans (12 oz) • Temperature range: 34°F -70°F • Convection cooling system rapidly and efficiently takes items to the set temperature • U-Select® Control offers five distinct modes: Beverage: 34°F - 65°F, Deli: 34°F - 40°F, Market: 34°F - 40°F, Pantry: 34°F - 70°F, Root Cellar: 45°F - 55°F • U-Select® Control with digital OLED display is ergonomically located on top of door • Maintains temperature to within 1°F of the set point to maximize preservation • Independently controlled dual-zones
INTERIOR/EXTERIOR	• Black interior is illuminated with LED theater lighting • Three full-extension, slide-out drawers in each compartment are removable for easy cleaning • The middle bins have two possible positions and come with a removable glass shelf to keep products stable • The lower bins are large enough to fit 2 one-gallon containers with additional space for more storage • Standard commercial stainless steel handle is interchangeable with professional handle accessory
INTEGRATION	• Robust, concealed and covered hinges with built-in door stop and closer • Adjustable grille can be shifted front-to-back and up-and-down • Integrated model requires ¾” custom door panel • Grille can accept an overlay toe-kick • Four independently adjustable leveling legs; rear legs are adjustable from the front for ease of installation

MODEL DETAILS

Model	Voltage	Door Swing	Finish	Shipping Weight
U-3036RRS-00A	115	Double Doors	Stainless Solid	221 lbs
U-3036RRINT-00A	115	Double Doors	Integrated Solid	205 lbs

ACCESSORIES

Model	Description	Finish	Shipping Weight
23054	Professional Door Handle, 1 ¼” Diameter	Stainless	2 lbs

DIMENSIONS

Dimensions shown apply to all finishes, including Integrated (INT) models with ¾” overlay panel/frame installed.

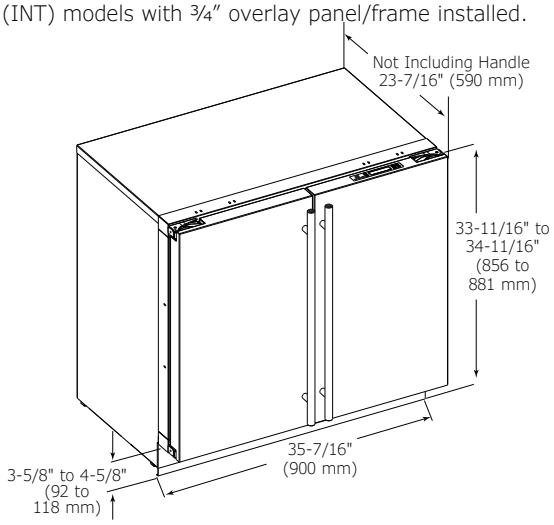

CABINET CUT-OUT

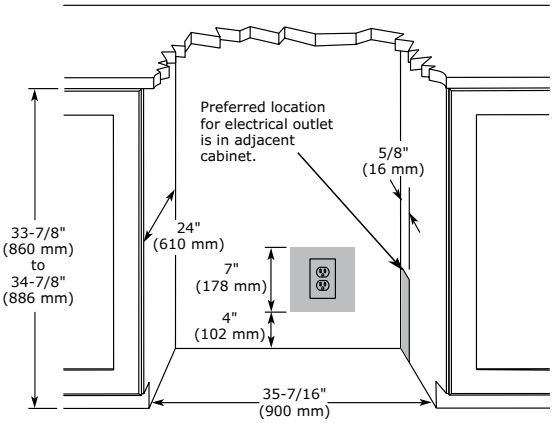

SPECIFICATIONS

Model	3036RR
Amps: Running	1.2
Capacity: Bottle (12 oz)	136
Capacity: Can (12 oz)	208
Capacity: Volume (cu ft)	6.9
Control Type	U-Select®
Dimensions: Product Depth	23 7⁄16" / 590 mm
Dimensions: Product Height	33 11⁄16" / 856 mm
Dimensions: Product Width	35 7⁄16" / 900 mm
Energy Consumption: Avg. Per Year	320 kWh
ENERGY STAR	No
Product Weight: Max	197 lbs
Refrigerant Type	R600a
Sabbath (Star K Certified)	Yes
Temperature Range	34°F - 70°F

INSTALLATION NOTES

When installing adjacent to wall, ensure 2 ½” clearance on hinged side for 90° door opening, allowing ample room for door handle.
No additional clearance around sides, top or rear of unit is needed for ventilation.
Do not obstruct front grille air flow.

COOLING SYSTEM

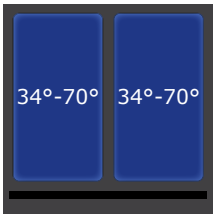

CONVECTION COOLING SYSTEM

ELECTRICAL REQUIREMENTS

This unit requires a grounded a polarized 115 VAC, 60 Hz, 15 A power supply (normal household current).

Residential

Please visit u-line.com to view this model’s User Guide.
All specifications are subject to change without notice.

Installed: 1224DWRINT

Drawer Models

	1224DWR	3024DWR
	1000 Series	3000 Series
Capacity: Bottle (12 oz)	98	90
Capacity: Can (12 oz)	150	142
Capacity: Volume (cu ft)	5.4	4.5
Control Type	Digital Touch Pad	U-Select®
Dimensions: Product Depth	23 ¼" / 591 mm	23 7⁄16" / 590 mm
Dimensions: Product Height	34 ⅛" / 867 mm	33 11⁄16" / 856 mm
Dimensions: Product Width	24" / 610 mm*	23 ⅝" / 600 mm
Door Swing	Drawers	Drawers
Energy Consumption: Avg. Per Year	305 kWh	300 kWh
ENERGY STAR	No	No
Finishes	Stainless Integrated	Stainless Integrated
Lock Model Available	No	No
Sabbath (Star K Certified)	Yes	Yes
Temperature Range	34°F - 45°F	34°F - 70°F
UL Listing	Residential / Commercial	Residential

*The cutout requires an additional ¼" width overall to ensure proper installation.

1224DWR

24” Solid Refrigerator Drawers • 1000 Series

STAINLESS
SOLID

INTEGRATED
SOLID

FEATURES & BENEFITS

PERFORMANCE	• Volume of 5.4 cu ft holds up to 98 bottles (12 oz) or 150 cans (12 oz) • Digital Touch Pad Control is conveniently located in top drawer • Temperature range: 34°F - 45°F • Digital passive cooling system • Maintains temperature to within 1°F of the set point to maximize preservation
INTERIOR/EXTERIOR	• Black interior is illuminated with LED lighting • Equipped with 2 full-extension robust stainless drawers • Standard commercial stainless steel handle is interchangeable with professional handle accessory
INTEGRATION	• Unit is designed to be built-in or can be freestanding with the freestanding accessory kit • Integrated model requires ¾” custom door panel • Four independently adjustable leveling legs provide a precise undercounter fit • Available in the following finishes: Stainless or Integrated

MODEL DETAILS

Model	Voltage	Door Swing	Finish	Shipping Weight
U-1224DWRS-00A	115	Drawers	Stainless Solid	142 lbs
U-1224DWRINT-00A	115	Drawers	Integrated Solid	134 lbs

ACCESSORIES

Model	Description	Finish	Shipping Weight
23054	Professional Door Handle, 1 ¼” Diameter	Stainless	2 lbs
U-FSK-B	Freestanding Kit	Black	3 lbs

DIMENSIONS

Dimensions shown apply to all finishes, including Integrated (INT) models with ¾” overlay panel/frame installed.

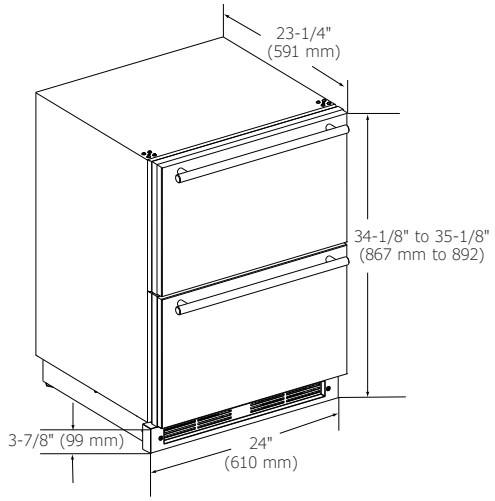

CABINET CUT-OUT

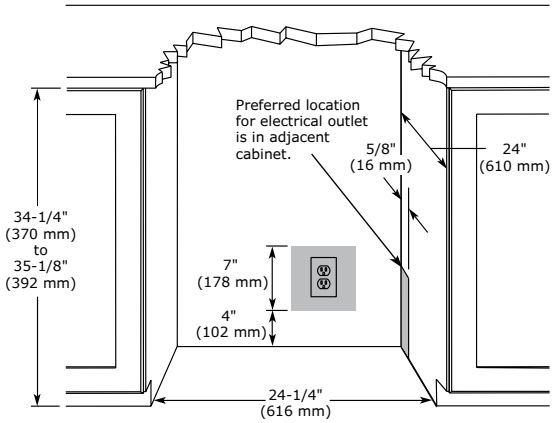

INSTALLATION NOTES

Cutout includes the additional ¼” width overall to ensure proper installation.
No additional clearance around sides, top or rear of unit is needed for ventilation.

SPECIFICATIONS

Model	1224DWR
Amps: Running	1.2
Capacity: Bottle (12 oz)	98
Capacity: Can (12 oz)	150
Capacity: Volume (cu ft)	5.4
Control Type	Digital Touch Pad
Dimensions: Product Depth	23 ¼" / 591 mm
Dimensions: Product Height	34 ⅛" / 867 mm
Dimensions: Product Width	24" / 610 mm
Energy Consumption: Avg. Per Year	305 kWh
ENERGY STAR	No
Product Weight: Max	132 lbs
Refrigerant Type	R600a
Sabbath (Star K Certified)	Yes
Temperature Range	34°F - 45°F

COOLING SYSTEM

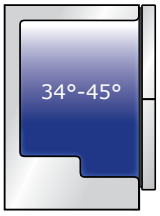

ELECTRICAL REQUIREMENTS

This unit requires a grounded a polarized 115 VAC, 60 Hz, 15 A power supply (normal household current).

Residential & Commercial

Please visit u-line.com to view this model’s User Guide.
All specifications are subject to change without notice.

3024DWR

24” Solid Refrigerator Drawers • Modular 3000 Series

STAINLESS SOLID

INTEGRATED SOLID

FEATURES & BENEFITS

PERFORMANCE	• Volume of 4.5 cu ft holds up to 90 bottles (12 oz) or 142 cans (12 oz) • Temperature range: 34°F - 70°F • Convection cooling system rapidly and efficiently takes items to the set temperature • U-Select® Control offers five distinct modes: Beverage: 34°F - 65°F, Deli: 34°F - 40°F, Market: 34°F - 40°F, Pantry: 34°F - 70°F, Root Cellar: 45°F - 55°F • U-Select® Control with digital OLED display is ergonomically located on top of upper drawer • Maintains temperature to within 1°F of the set point to maximize preservation • Independently controlled dual-zones
INTERIOR/EXTERIOR	• Black interior is illuminated with LED theater lighting • Equipped with 2 full-extension soft-close drawers • Upper bin includes Slide and Divide bin organizer
INTEGRATION	• Adjustable grille can be shifted front-to-back and up-and-down • Integrated model requires ¾” custom door panel • Grille can accept an overlay toe-kick • Four independently adjustable leveling legs; rear legs are adjustable from the front for ease of installation

MODEL DETAILS

Model	Voltage	Door Swing	Finish	Shipping Weight
U-3024DWRS-00A	115	Drawers	Stainless Solid	166 lbs
U-3024DWRINT-00A	115	Drawers	Integrated Solid	158 lbs

3024DWR

Modular 3000 Series • 24” Solid Refrigerator Drawers

DIMENSIONS

Dimensions shown apply to all finishes, including Integrated (INT) models with ¾” overlay panel/frame installed.

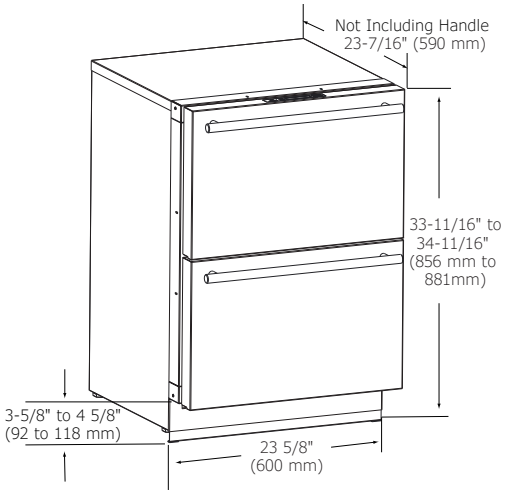

CABINET CUT-OUT

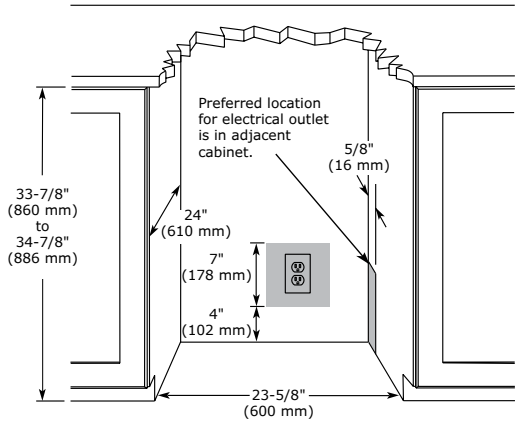

SPECIFICATIONS

Model	3024DWR
Amps: Running	1.2
Capacity: Bottle (12 oz)	90
Capacity: Can (12 oz)	142
Capacity: Volume (cu ft)	4.5
Control Type	U-Select®
Dimensions: Product Depth	23 7⁄16" / 590 mm
Dimensions: Product Height	33 11⁄16" / 856 mm
Dimensions: Product Width	23 5⁄8" / 600 mm
Energy Consumption: Avg. Per Year	300 kWh
ENERGY STAR	No
Product Weight: Max	156 lbs
Refrigerant Type	R600a
Sabbath (Star K Certified)	Yes
Temperature Range	34°F - 70°F

INSTALLATION NOTES

No additional clearance around sides, top or rear of unit is needed for ventilation.

Do not obstruct front grille air flow.

COOLING SYSTEM

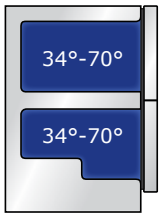

ELECTRICAL REQUIREMENTS

This unit requires a grounded a polarized 115 VAC, 60 Hz, 15 A power supply (normal household current).

Residential

Please visit u-line.com to view this model’s User Guide.
All specifications are subject to change without notice.

Installed: 3024FZRINT

Freezers

	3024FZR
	3000 Series
Capacity: Volume (cu ft)	4.5
Control Type	U-Select®
Dimensions: Product Depth	24" / 610 mm
Dimensions: Product Height	33 11/16" / 856 mm
Dimensions: Product Width	23 5/8" / 600 mm
Door Swing	Right or Left
Energy Consumption: Avg. Per Year	430 kWh
ENERGY STAR	No
Finishes	Stainless Integrated
Lock Model Available	No
Sabbath (Star K Certified)	Yes
Temperature Range	-5°F - 5°F
UL Listing	Residential

3024FZR

24” Freezer • Modular 3000 Series

STAINLESS
SOLID

INTEGRATED
SOLID

FEATURES & BENEFITS

PERFORMANCE	• Volume of 4.5 cu ft • Temperature range: -5°F to 5°F • Convection cooling system rapidly and efficiently takes items to the set temperature • U-Select® Control allows you to quickly set your model to our pre-programmed Polar mode • U-Select® Control with digital OLED display is ergonomically located on top of door • Maintains temperature to within 1°F of the set point to maximize preservation
INTERIOR/EXTERIOR	• Black interior is illuminated with LED theater lighting that automatically turns off when the door is closed • Three full-extension, durable vinyl coated freezer baskets are removable for easy cleaning • Baskets can accommodate large pizza boxes and one-gallon containers with additional space for more storage • Standard commercial stainless steel handle is interchangeable with professional handle accessory • Must be ordered right-hand or left-hand hinged
INTEGRATION	• Robust, concealed and covered hinges with built-in door stop and closer • Adjustable grille can be shifted front-to-back and up-and-down • Grille can accept a ¼” custom integrated toe-kick • Integrated model requires ¾” custom door panel • Four independently adjustable leveling legs; rear legs are adjustable from the front for ease of installation

MODEL DETAILS

Model	Voltage	Door Swing	Finish	Shipping Weight
U-3024FZRS-00A	115	Right-Hand Hinge	Stainless Solid	166 lbs
U-3024FZRS-01A	115	Left-Hand Hinge	Stainless Solid	166 lbs
U-3024FZRINT-00A	115	Right-Hand Hinge	Integrated Solid	158 lbs
U-3024FZRINT-01A	115	Left-Hand Hinge	Integrated Solid	158 lbs

ACCESSORIES

Model	Description	Finish	Shipping Weight
23054	Professional Door Handle, 1 ¼” Diameter	Stainless	2 lbs

DIMENSIONS

Dimensions shown apply to all finishes, including Integrated (INT) models with ¾” overlay panel/frame installed.

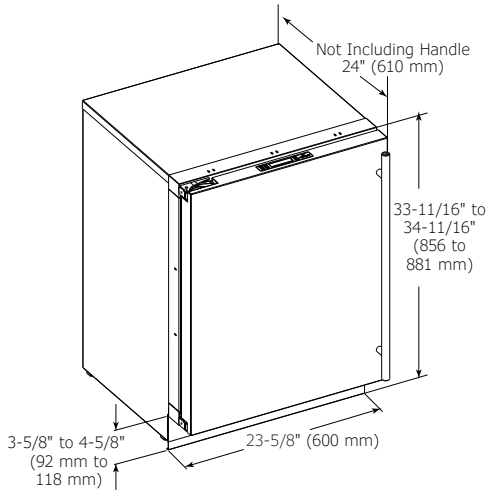

CABINET CUT-OUT

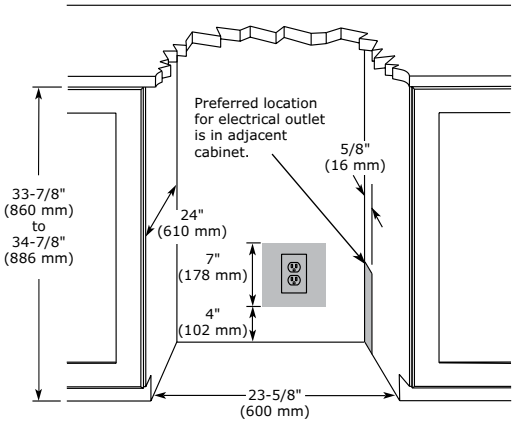

INSTALLATION NOTES

When installing adjacent to wall, ensure 2 ½” clearance on hinged side for 90° door opening, allowing ample room for door handle.
No additional clearance around sides, top or rear of unit is needed for ventilation.
Do not obstruct front grille air flow.

SPECIFICATIONS

Model	3024FZR
Amps: Running	2.4
Capacity: Volume (cu ft)	4.5
Control Type	U-Select®
Defrost Type	Frost Free
Dimensions: Product Depth	24" / 610 mm
Dimensions: Product Height	33 11⁄16" / 856 mm
Dimensions: Product Width	23 5⁄8" / 600 mm
Energy Consumption: Avg. Per Year	430 kWh
ENERGY STAR	No
Product Weight: Max	156 lbs
Refrigerant Type	R134a
Sabbath (Star K Certified)	Yes
Temperature Range	-5°F to 5°F

COOLING SYSTEM

ELECTRICAL REQUIREMENTS

This unit requires a grounded a polarized 115 VAC, 60 Hz, 15 A power supply (normal household current).

Residential

Please visit u-line.com to view this model’s User Guide.
All specifications are subject to change without notice.

Installed: 1224RFINT

Combo® Models

	CO1224F	1224RF
	1000 Series	
Capacity: Bottle (12 oz)	61	61
Capacity: Can (12 oz)	114	114
Capacity: Volume (cu ft)	4.2	Ref: 4.2 Fzr: 1.5
Control Type	Digital Touch Pad	Digital Touch Pad
Dimensions: Product Depth	23 ¼" / 591 mm	23 ¼" / 591 mm
Dimensions: Product Height	34 ⅛" / 867 mm	34 ⅛" / 867 mm
Dimensions: Product Width	24" / 610 mm*	24" / 610 mm*
Door Swing	Field Reversible	Field Reversible
Energy Consumption: Avg. Per Year	540 kWh	496 kWh
ENERGY STAR	No	No
Finishes	Stainless Integrated Black White	Stainless Integrated Black White
Ice Production Per Day	8 lbs	na
Ice Storage	8 lbs	na
Lock Model Available	No	No
Sabbath (Star K Certified)	Yes	Yes
Temperature Range	34°F - 45°F	Ref: 34°F - 45°F Freezer: 0°F - 5°F
UL Listing	Residential	Residential

*The cutout requires an additional ¼" width overall to ensure proper installation.
For ADA Series Combo® Model data, see page 118.

CO1224F

24” Combo® Model

STAINLESS SOLID

INTEGRATED SOLID

BLACK SOLID

WHITE SOLID

FEATURES & BENEFITS

PERFORMANCE	• Volume of 4.2 cu ft holds up to 61 bottles (12 oz) or 114 cans (12 oz) • Digital Touch Pad Control is conveniently located on upper face of unit • Refrigerator temperature range: 34°F - 45°F • Digital passive cooling system • Maintains temperature to within 1°F of the set point to maximize preservation • Produces and stores up to 8 lbs of ice per day • Crescent ice cube dimensions: ½” W x ¾” H x ½” L • Patented frost-free technology
INTERIOR/EXTERIOR	• White interior is illuminated with LED lighting • Three removable tempered glass shelves • Standard commercial stainless steel handle is interchangeable with professional handle accessory • No drain required • Door swing is field reversible
INTEGRATION	• Unit is designed to be built-in or can be freestanding with the freestanding accessory kit • Integrated model requires ¾” custom door panel • Four independently adjustable leveling legs provide a precise undercounter fit • Available in the following finishes: Stainless, Integrated, Black, or White

MODEL DETAILS

Model	Voltage	Door Swing	Finish	Shipping Weight
U-CO1224FS-00A	115	Field Reversible	Stainless Solid	129 lbs
U-CO1224FINT-00A	115	Field Reversible	Integrated Solid	126 lbs
U-CO1224FB-00A	115	Field Reversible	Black Solid	129 lbs
U-CO1224FW-00A	115	Field Reversible	White Solid	129 lbs

ACCESSORIES

Model	Description	Finish	Shipping Weight
23054	Professional Door Handle, 1 ¼” Diameter	Stainless	2 lbs
U-FSK-B	Freestanding Kit	Black	3 lbs
WATERHOOKUP	Braided water supply line kit	na	2 lbs

CO1224F

24” Combo® Model

DIMENSIONS

Dimensions shown apply to all finishes, including Integrated (INT) models with ¾” overlay panel/frame installed.

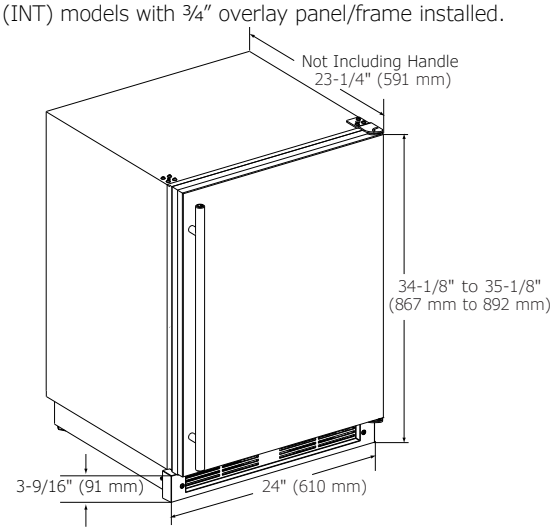

CABINET CUT-OUT

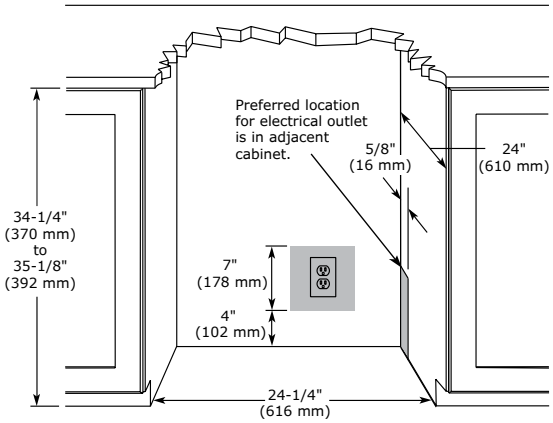

INSTALLATION NOTES

When installing adjacent to wall, ensure 2 ½” clearance on hinged side for 90° door opening, allowing ample room for door handle.
When installing a left-hand hinge model, allow for 145° door swing for proper removal of ice bin.
Cutout includes the additional ¼” width overall to ensure proper installation.
No additional clearance around sides, top or rear of unit is needed for ventilation.
Do not obstruct front grille air flow.

Please visit u-line.com to view this model’s User Guide.
All specifications are subject to change without notice.

SPECIFICATIONS

Model	CO1224F
Amps: Running	2.4
Capacity: Bottle (12 oz)	61
Capacity: Can (12 oz)	114
Capacity: Refrigerator Volume (cu ft)	4.2
Control Type	Digital Touch Pad
Defrost Type	Frost Free
Dimensions: Product Depth	23 ¼" / 591 mm
Dimensions: Product Height	34 ⅛" / 867 mm
Dimensions: Product Width	24" / 610 mm
Energy Consumption: Avg. Per Year	580 kWh
ENERGY STAR	No
Ice Production Per Day	8 lbs
Ice Storage	8 lbs
Product Weight: Max	119 lbs
Refrigerant Type	R134A
Sabbath (Star K Certified)	Yes
Temperature Range	34°F - 45°F

ELECTRICAL REQUIREMENTS

This unit requires a grounded a polarized 115 VAC, 60 Hz, 15 A power supply (normal household current).

Residential

1224RF

24” Refrigerator/Freezer • Combo® Models

STAINLESS SOLID

INTEGRATED SOLID

BLACK SOLID

WHITE SOLID

FEATURES & BENEFITS

PERFORMANCE	• Refrigerator volume of 4.2 cu ft holds up to 61 bottles (12 oz) or 114 cans (12 oz) • Freezer volume of 1.5 cu ft • Digital Touch Pad Control is conveniently located on upper face of unit • Refrigerator temperature range: 34°F - 45°F • Frost Free Freezer maintains a temperature range of 0°F - 5°F • Digital passive cooling system • Maintains temperature to within 1°F of the set point to maximize preservation
INTERIOR/EXTERIOR	• White interior is illuminated with LED lighting • Three removable tempered glass shelves • Standard commercial stainless steel handle is interchangeable with professional handle accessory • Door swing is field reversible
INTEGRATION	• Unit is designed to be built-in or can be freestanding with the freestanding accessory kit • Integrated model requires ¾” custom door panel • Four independently adjustable leveling legs provide a precise undercounter fit • Available in the following finishes: Stainless, Integrated, Black, or White

MODEL DETAILS

Model	Voltage	Door Swing	Finish	Shipping Weight
U-1224RFS-00A	115	Field Reversible	Stainless Solid	123 lbs
U-1224RFINT-00A	115	Field Reversible	Integrated Solid	120 lbs
U-1224RFB-00A	115	Field Reversible	Black Solid	123 lbs
U-1224RFW-00A	115	Field Reversible	White Solid	123 lbs

ACCESSORIES

Model	Description	Finish	Shipping Weight
23054	Professional Door Handle, 1 ¼” Diameter	Stainless	2 lbs
U-FSK-B	Freestanding Kit	Black	3 lbs

DIMENSIONS

Dimensions shown apply to all finishes, including Integrated (INT) models with ¾” overlay panel/frame installed.

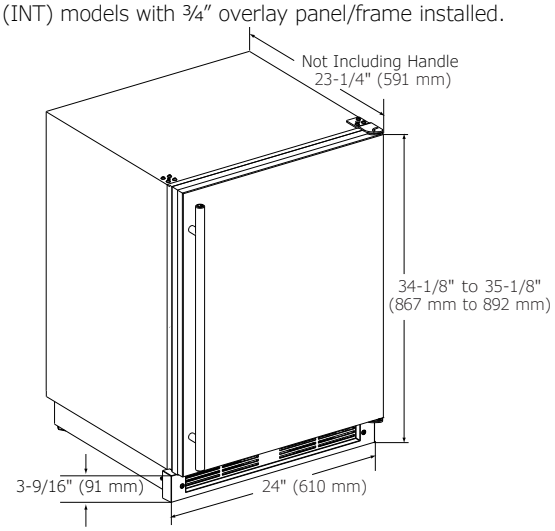

CABINET CUT-OUT

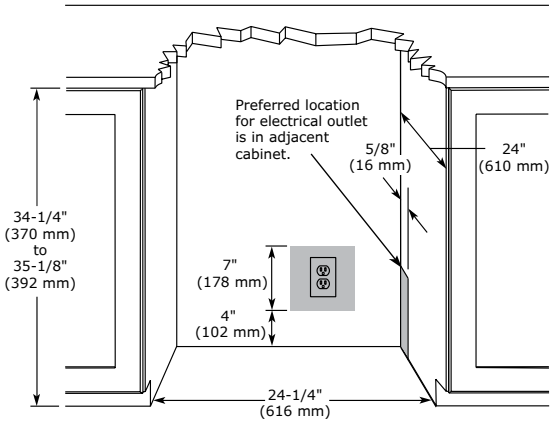

INSTALLATION NOTES

When installing adjacent to wall, ensure 2 ½” clearance on hinged side for 90° door opening, allowing ample room for door handle.
Cutout includes the additional ¼” width overall to ensure proper installation.
No additional clearance around sides, top or rear of unit is needed for ventilation.
Do not obstruct front grille air flow.

SPECIFICATIONS

Model	1224RF
Amps: Running	2.4
Capacity: Bottle (12 oz)	61
Capacity: Can (12 oz)	114
Capacity: Volume (cu ft)	Ref: 4.2 Fzr: 1.5
Control Type	Digital Touch Pad
Defrost Type	Frost Free
Dimensions: Product Depth	23 ¼" / 591 mm
Dimensions: Product Height	34 ⅛" / 867 mm
Dimensions: Product Width	24" / 610 mm
Energy Consumption: Avg. Per Year	496 kWh
ENERGY STAR	No
Product Weight: Max	113 lbs
Refrigerant Type	R134a
Sabbath (Star K Certified)	Yes
Temperature Range	Ref: 34°F - 45°F Freezer: 0°F - 5°F

ELECTRICAL REQUIREMENTS

This unit requires a grounded a polarized 115 VAC, 60 Hz, 15 A power supply (normal household current).

Residential

Please visit u-line.com to view this model’s User Guide.
All specifications are subject to change without notice.

Installed: ADA24RS

ADA Series

	BI95	BI98	ADA15IM	29R	CO29F	ADA24R	ADA24RGL
	ADA Series						
Capacity: Bottle (12 oz)	na	na	na	35	24	70	70
Capacity: Can (12 oz)	na	na	na	48	44	140	140
Capacity: Volume (cu ft)	na	na	na	3.3	2.1	5.3	5.4
Control Type	On/Off Switch	On/Off Switch	On/Off Switch	Mechanical Dial	Mechanical Dial	Digital Touch Pad	Digital Touch Pad
Dimensions: Product Depth	17″ / 432 mm	20" / 508 mm	23" / 584 mm	23" / 584 mm	23" / 584 mm	23 ¼" / 591 mm	23 ¼" / 591 mm
Dimensions: Product Height	25 1⁄16″ / 637 mm	27 3⁄8" / 695 mm	32" / 813 mm	28 1⁄2" / 724 mm	28 1⁄2" / 724 mm	32" / 813 mm	32" / 813 mm
Dimensions: Product Width	13 15⁄16″ / 354 mm	14 15⁄16" / 379 mm	14 15⁄16" / 379 mm	20 7⁄8" / 530 mm	20 7⁄8" / 530 mm	24" / 610 mm	24" / 610 mm
Door Swing	Field Reversible	Field Reversible	Field Reversible	Field Reversible*	Field Reversible	Field Reversible	Field Reversible
Energy Consumption: Avg. Per Year	na	na	na	230 kWh	567 kWh	240 kWh	300 kWh
ENERGY STAR	na	na	na	ENERGY STAR	No	ENERGY STAR	No
Finishes	Black White	Black White	Stainless Black	Black White	Black White	Stainless Black	Stainless Black
Ice Production Per Day	23 lbs	25 lbs	25 lbs	na	8 lbs	na	na
Ice Storage	12 lbs	25 lbs	25 lbs	na	8 lbs	na	na
Lock Model Available	No	No	No	Yes	No	Standard	Standard
Sabbath (Star K Certified)	No	No	No	No	No	Yes	Yes
Temperature Range	na	na	na	34°F - 45°F	34°F - 45°F	34°F - 45°F	34°F - 45°F
UL Listing	Yes	Yes	Yes	Yes	Yes	Residential / Commercial	Residential / Commercial

*Models with a lock option must be ordered hinge specific.

BI95

14” Crescent Ice Maker • ADA Series

BLACK
SOLID

WHITE
SOLID

FEATURES & BENEFITS

PERFORMANCE	• Uses less than 3 gallons of water to produce up to 23 lbs of ice per day • Up to 12 lbs in ice storage capacity • Daily ice production rate is approx. 4 times greater than the average household refrigerator • Crescent ice cube dimensions: ½” W x ¾” H x ½” L • On/Off switch is conveniently located on the grille
INTERIOR/EXTERIOR	• No drain required • Door swing is field reversible
INTEGRATION	• Unit is designed to be built-in or can be freestanding • Accepts a ¼” custom insert panel • Available in the following finishes: Black or White

MODEL DETAILS

Model	Voltage	Door Swing	Finish	Shipping Weight
U-BI95B-00A	115	Field Reversible	Black Solid	59 lbs
U-BI95W-00A	115	Field Reversible	White Solid	59 lbs

ACCESSORIES

Model	Description	Finish	Shipping Weight
WATERHOOKUP	Braided water supply line kit	na	2 lbs

DIMENSIONS

Dimensions shown apply to all finishes.

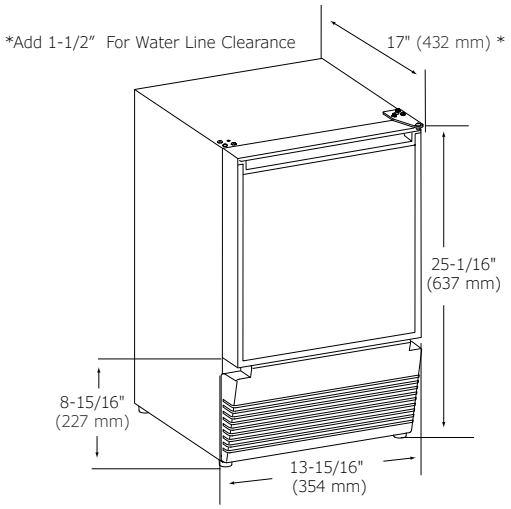

CABINET CUT-OUT

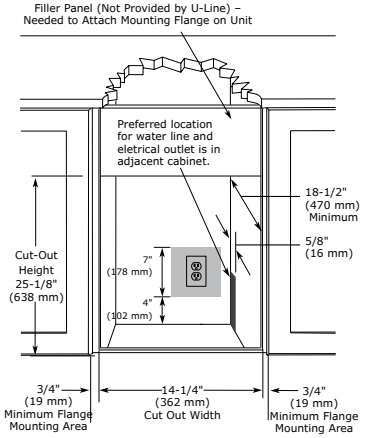

INSTALLATION NOTES

No additional clearance around sides, top or rear of unit is needed for ventilation.
Do not obstruct front grille air flow.

SPECIFICATIONS

Model	BI95
Amps: Running	2.5
Control Type	On/Off Switch
Defrost Type	Manual
Dimensions: Product Depth	17" / 432 mm
Dimensions: Product Height	25 1/16" / 637 mm
Dimensions: Product Width	13 15/16" / 354 mm
Energy Consumption: Avg. Per Year	na
ENERGY STAR	na
Ice Production Per Day	23 lbs
Ice Storage	12 lbs
Product Weight: Max	53 lbs
Refrigerant Type	R134a
Sabbath (Star K Certified)	No

ELECTRICAL REQUIREMENTS

This unit requires a grounded a polarized 115 VAC, 60 Hz, 15 A power supply (normal household current).

Please visit u-line.com to view this model’s User Guide.
All specifications are subject to change without notice.

BI98

15” Crescent Ice Maker • ADA Series

BLACK
SOLID

WHITE
SOLID

FEATURES & BENEFITS

PERFORMANCE	• Uses less than 3 gallons of water to produce up to 25 lbs of ice per day • Up to 25 lbs in ice storage capacity • Daily ice production rate is approx. 4 times greater than the average household refrigerator • Crescent ice cube dimensions: ½” W x ¾” H x ½” L • On/Off switch is conveniently located on the grille
INTERIOR/EXTERIOR	• No drain required • Door swing is field reversible
INTEGRATION	• Unit is designed to be built-in or can be freestanding • Accepts a ¼” custom insert panel • Available in the following finishes: Black or White

MODEL DETAILS

Model	Voltage	Door Swing	Finish	Shipping Weight
U-BI98B-00A	115	Field Reversible	Black Solid	73 lbs
U-BI98W-00A	115	Field Reversible	White Solid	73 lbs

ACCESSORIES

Model	Description	Finish	Shipping Weight
WATERHOOKUP	Braided water supply line kit	na	2 lbs

DIMENSIONS

Dimensions shown apply to all finishes.

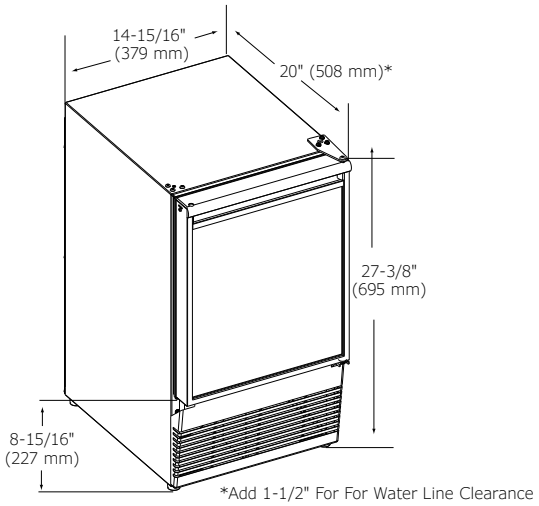

CABINET CUT-OUT

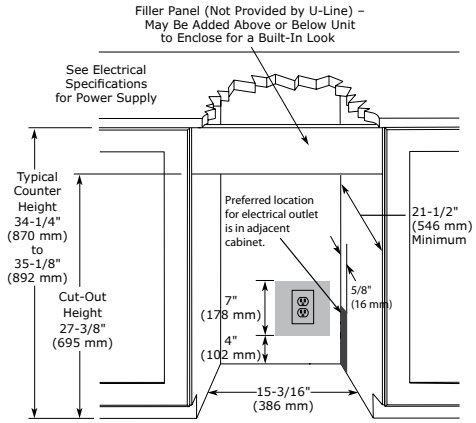

INSTALLATION NOTES

No additional clearance around sides, top or rear of unit is needed for ventilation.
Do not obstruct front grille air flow.

SPECIFICATIONS

Model	BI98
Amps: Running	2.5
Control Type	On/Off Switch
Defrost Type	Manual
Dimensions: Product Depth	20" / 508 mm
Dimensions: Product Height	27 ⅜" / 695 mm
Dimensions: Product Width	14 15⁄16" / 379 mm
ENERGY STAR	na
Ice Production Per Day	25 lbs
Ice Storage	25 lbs
Product Weight: Max	67 lbs
Refrigerant Type	R134a
Sabbath (Star K Certified)	No

ELECTRICAL REQUIREMENTS

This unit requires a grounded a polarized 115 VAC, 60 Hz, 15 A power supply (normal household current).

Please visit u-line.com to view this model’s User Guide.
All specifications are subject to change without notice.

ADA15IM

15” Crescent Ice Maker • ADA Series

STAINLESS
SOLID

BLACK
SOLID

FEATURES & BENEFITS

PERFORMANCE	• Uses less than 3 gallons of water to produce up to 25 lbs of ice per day • Up to 25 lbs in ice storage capacity • Daily ice production rate is approx. 4 times greater than the average household refrigerator • Crescent ice cube dimensions: ½” W x ¾” H x ½” L • On/Off switch is conveniently located on lower face of unit
INTERIOR/EXTERIOR	• No drain required • Standard commercial stainless steel handle is interchangeable with professional handle accessory • Door swing is field reversible
INTEGRATION	• Unit is designed to be built-in or can be freestanding • Four independently adjustable leveling legs provide a precise undercounter fit • Available in the following finishes: Stainless or Black

MODEL DETAILS

Model	Voltage	Door Swing	Finish	Shipping Weight
U-ADA15IMS-00A	115	Field Reversible	Stainless Solid	90 lbs
U-ADA15IMB-00A	115	Field Reversible	Black Solid	90 lbs

ACCESSORIES

Model	Description	Finish	Shipping Weight
23054	Professional Door Handle, 1 ¼” Diameter	Stainless	2 lbs
WATERHOOKUP	Braided water supply line kit	na	2 lbs

ADA15IM

ADA Series • 15” Crescent Ice Maker

DIMENSIONS

Dimensions shown apply to all finishes.

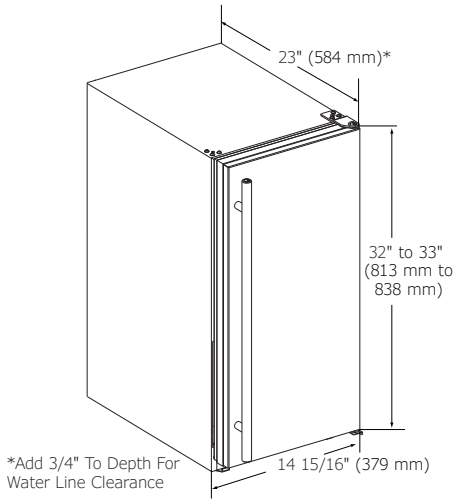

CABINET CUT-OUT

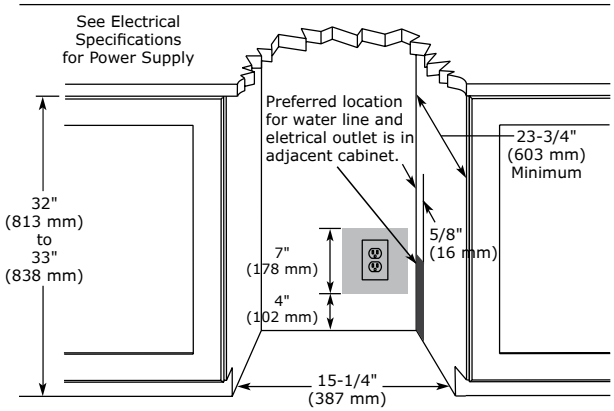

INSTALLATION NOTES

When installing adjacent to wall, ensure 2 ½” clearance on hinged side for 90° door opening, allowing ample room for door handle.
No additional clearance around sides, top or rear of unit is needed for ventilation.
Do not obstruct front grille air flow.

SPECIFICATIONS

Model	ADA15IM
Amps: Running	2.5
Control Type	On/Off Switch
Defrost Type	Manual
Dimensions: Product Depth	23" / 584 mm
Dimensions: Product Height	32" / 813 mm
Dimensions: Product Width	14 15⁄16" / 379 mm
ENERGY STAR	na
Ice Production Per Day	25 lbs
Ice Storage	25 lbs
Product Weight: Max	84 lbs
Refrigerant Type	R134a
Sabbath (Star K Certified)	No

ELECTRICAL REQUIREMENTS

This unit requires a grounded a polarized 115 VAC, 60 Hz, 15 A power supply (normal household current).

Please visit u-line.com to view this model’s User Guide.
All specifications are subject to change without notice.

29R

21” ADA Solid Door Refrigerator • ADA Series

BLACK
SOLID

BLACK
SOLID (LOCK)

WHITE
SOLID

WHITE
SOLID (LOCK)

FEATURES & BENEFITS

PERFORMANCE	• Volume of 3.3 cu ft holds up to 35 bottles (12 oz) or 48 cans (12 oz) • Mechanical Dial Control is conveniently located on the grille • Temperature range: 34°F - 45°F • Mechanical passive cooling system
INTERIOR/EXTERIOR	• Three removable tempered glass shelves • Three fixed shelves in door • Door swing is field reversible for non-lock models • Door lock models are available, and must be ordered hinge specific
INTEGRATION	• Unit is designed to be built-in or can be freestanding • Accepts a 1/4” custom insert panel • Available in the following finishes: Black or White

MODEL DETAILS

Model	Voltage	Door Swing	Finish	Shipping Weight
U-29RB-00A	115	Field Reversible	Black Solid	89 lbs
U-29RB-13A	115	Right-Hand Hinge	Black Solid (Lock)	89 lbs
U-29RB-15A	115	Left-Hand Hinge	Black Solid (Lock)	89 lbs
U-29RW-00A	115	Field Reversible	White Solid	89 lbs
U-29RW-13A	115	Right-Hand Hinge	White Solid (Lock)	89 lbs
U-29RW-15A	115	Left-Hand Hinge	White Solid (Lock)	89 lbs

DIMENSIONS

Dimensions shown apply to all finishes.

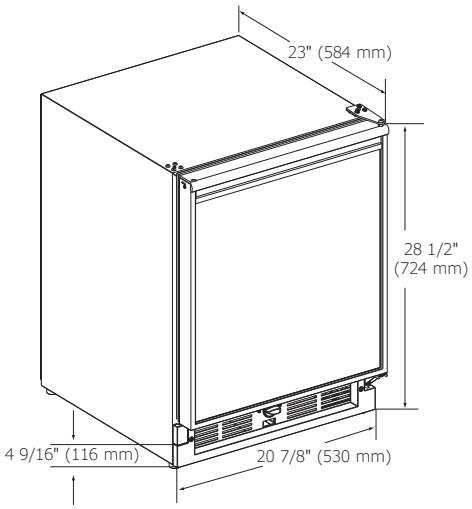

CABINET CUT-OUT

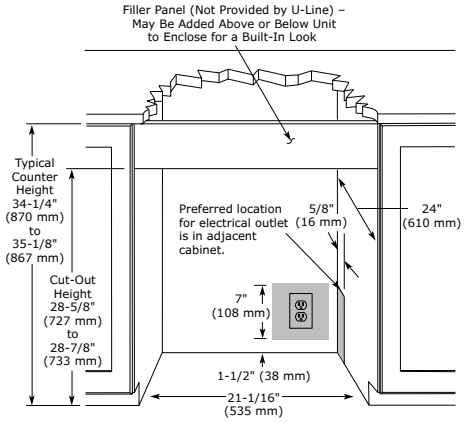

INSTALLATION NOTES

Cutout includes the additional ¼” width overall to ensure proper installation.
No additional clearance around sides, top or rear of unit is needed for ventilation.
Do not obstruct front grille air flow.

SPECIFICATIONS

Model	29R
Amps: Running	1.2
Capacity: Bottle (12 oz)	35
Capacity: Can (12 oz)	48
Capacity: Volume (cu ft)	3.3
Control Type	Mechanical Dial
Dimensions: Product Depth	23" / 584 mm
Dimensions: Product Height	28 ½" / 724 mm
Dimensions: Product Width	20 ⅞" / 530 mm
Energy Consumption: Avg. Per Year	230 kWh
ENERGY STAR	ENERGY STAR
Product Weight: Max	80 lbs
Refrigerant Type	R600a
Sabbath (Star K Certified)	No
Temperature Range	34°F - 45°F

COOLING SYSTEM

ELECTRICAL REQUIREMENTS

This unit requires a grounded a polarized 115 VAC, 60 Hz, 15 A power supply (normal household current).

Residential & Commercial

Please visit u-line.com to view this model’s User Guide.
All specifications are subject to change without notice.

CO29F

21″ ADA Combo® Model • ADA Series

BLACK
SOLID

WHITE
SOLID

FEATURES & BENEFITS

PERFORMANCE	• Refrigerator volume of 2.1 cu ft holds up to 24 bottles (12 oz) or 44 cans (12 oz) • Mechanical Dial Control is conveniently located on the grille • Temperature range: 34°F - 45°F • Mechanical passive cooling system • Produces and stores up to 8 lbs of ice per day • Crescent ice cube dimensions: ½″ W x ¾″ H x ½″ L
INTERIOR/EXTERIOR	• No drain required • Two removable tempered glass shelves • Two fixed storage compartments in door • Door swing is field reversible
INTEGRATION	• Unit is designed to be built-in or can be freestanding • Accepts a ¼″ custom insert panel • Available in the following finishes: Black or White

MODEL DETAILS

Model	Voltage	Door Swing	Finish	Shipping Weight
U-CO29FB-00A	115	Field Reversible	Black Solid	101 lbs
U-CO29FW-00A	115	Field Reversible	White Solid	101 lbs

ACCESSORIES

Model	Description	Finish	Shipping Weight
WATERHOOKUP	Braided water supply line kit	na	2 lbs

DIMENSIONS

Dimensions shown apply to all finishes.

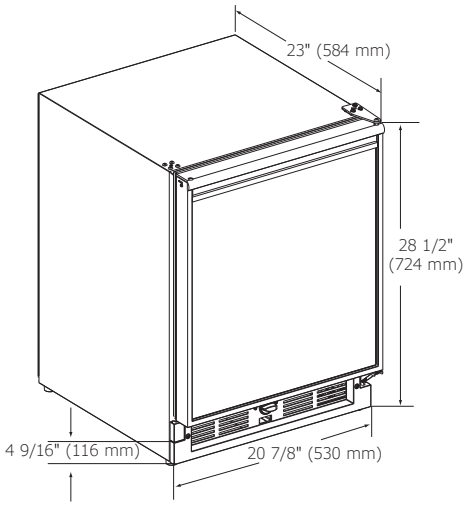

CABINET CUT-OUT

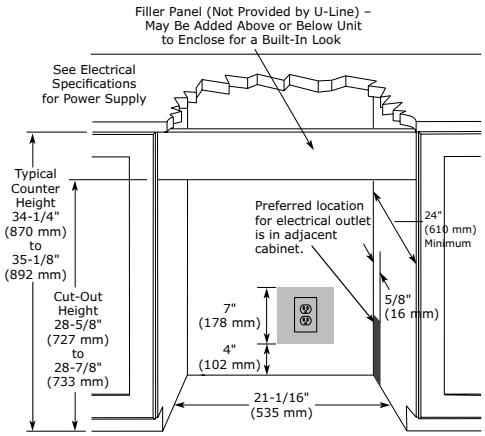

INSTALLATION NOTES

Cutout includes the additional ¼” width overall to ensure proper installation.
When installing a left-hand hinge model, allow for 145° door swing for proper removal of ice bin.
No additional clearance around sides, top or rear of unit is needed for ventilation.
Do not obstruct front grille air flow.

SPECIFICATIONS

Model	CO29F
Amps: Running	2.5
Capacity: Bottle (12 oz)	24
Capacity: Can (12 oz)	44
Capacity: Refrigerator Volume (cu ft)	2.1
Control Type	Mechanical Dial
Defrost Type	Frost Free
Dimensions: Product Depth	23" / 584 mm
Dimensions: Product Height	28 ½" / 724 mm
Dimensions: Product Width	20 ⅞" / 530 mm
Energy Consumption: Avg. Per Year	567 kWh
ENERGY STAR	No
Ice Production Per Day	8 lbs
Ice Storage	8 lbs
Product Weight: Max	92 lbs
Refrigerant Type	R134A
Sabbath (Star K Certified)	No
Temperature Range	34°F - 45°F

ELECTRICAL REQUIREMENTS

This unit requires a grounded a polarized 115 VAC, 60 Hz, 15 A power supply (normal household current).

Residential

Please visit u-line.com to view this model’s User Guide.
All specifications are subject to change without notice.

ADA24R

24” ADA Solid Door Refrigerator • ADA Series

STAINLESS
SOLID (LOCK)

BLACK
SOLID (LOCK)

FEATURES & BENEFITS

PERFORMANCE	• Volume of 5.3 cu ft holds up to 70 bottles (12 oz) or 140 cans (12 oz) • Digital Touch Pad Control is conveniently located on upper face of unit • Temperature range: 34°F - 45°F • Convection cooling system rapidly and efficiently takes items to the set temperature • Maintains temperature to within 1°F of the set point to maximize preservation
INTERIOR/EXTERIOR	• 32” height meets ADA height requirement yet maximizes allowable space • White interior is illuminated with LED lighting • Four chrome plated durable wire shelves • Standard commercial stainless steel handle is interchangeable with professional handle accessory • Door swing is field reversible • Door lock is standard
INTEGRATION	• Unit is designed to be built-in or can be freestanding • Four independently adjustable leveling legs provide a precise undercounter fit • Available in the following finishes: Stainless or Black

MODEL DETAILS

Model	Voltage	Door Swing	Finish	Shipping Weight
U-ADA24RS-13A	115	Field Reversible	Stainless Solid (Lock)	123 lbs
U-ADA24RB-13A	115	Field Reversible	Black Solid (Lock)	123 lbs

ACCESSORIES

Model	Description	Finish	Shipping Weight
23054	Professional Door Handle, 1 ¼” Diameter	Stainless	2 lbs

ADA24R

ADA Series • 24” ADA Solid Door Refrigerator

DIMENSIONS

Dimensions shown apply to all finishes.

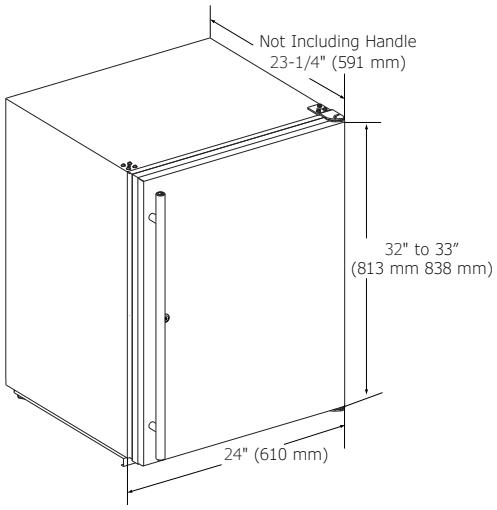

CABINET CUT-OUT

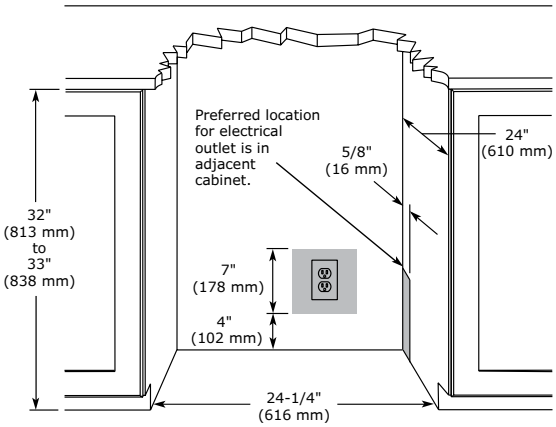

SPECIFICATIONS

Model	ADA24R
Amps: Running	1.2
Capacity: Bottle (12 oz)	70
Capacity: Can (12 oz)	140
Capacity: Volume (cu ft)	5.3
Control Type	Digital Touch Pad
Dimensions: Product Depth	23 ¼" / 591 mm
Dimensions: Product Height	32" / 813 mm
Dimensions: Product Width	24" / 610 mm
Energy Consumption: Avg. Per Year	240 kWh
ENERGY STAR	ENERGY STAR
Product Weight: Max	117 lbs
Refrigerant Type	R600a
Sabbath (Star K Certified)	Yes
Temperature Range	34°F - 45°F

INSTALLATION NOTES

When installing adjacent to wall, ensure 2 ½” clearance on hinged side for 90° door opening, allowing ample room for door handle.
Cutout includes the additional ¼” width overall to ensure proper installation.
No additional clearance around sides, top or rear of unit is needed for ventilation.
Do not obstruct front grille air flow.

COOLING SYSTEM

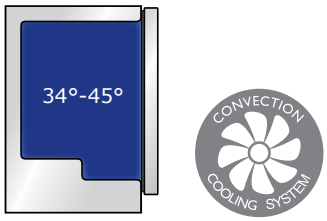

ELECTRICAL REQUIREMENTS

This unit requires a grounded a polarized 115 VAC, 60 Hz, 15 A power supply (normal household current).

Residential & Commercial

Please visit u-line.com to view this model’s User Guide.
All specifications are subject to change without notice.

ADA24RGL

24” ADA Glass Door Refrigerator • ADA Series

STAINLESS
FRAME (LOCK)

BLACK
FRAME (LOCK)

FEATURES & BENEFITS

PERFORMANCE	• Volume of 5.4 cu ft holds up to 70 bottles (12 oz) or 140 cans (12 oz) • Digital Touch Pad Control is conveniently located on upper face of unit • Temperature range: 34°F - 45°F • Convection cooling system rapidly and efficiently takes items to the set temperature • Maintains temperature to within 1°F of the set point to maximize preservation
INTERIOR/EXTERIOR	• 32” height meets ADA height requirement yet maximizes allowable space • White interior is illuminated with LED lighting • Four chrome plated durable wire shelves • LowE coated, argon gas filled thermopane glass door provides protection from harmful UV light • Standard commercial stainless steel handle is interchangeable with professional handle accessory • Door swing is field reversible • Door lock is standard
INTEGRATION	• Unit is designed to be built-in or can be freestanding • Four independently adjustable leveling legs provide a precise undercounter fit • Available in the following finishes: Stainless or Black

MODEL DETAILS

Model	Voltage	Door Swing	Finish	Shipping Weight
U-ADA24RGLS-13A	115	Field Reversible	Stainless Frame (Lock)	128 lbs
U-ADA24RGLB-13A	115	Field Reversible	Black Frame (Lock)	128 lbs

ACCESSORIES

Model	Description	Finish	Shipping Weight
23054	Professional Door Handle, 1 ¼” Diameter	Stainless	2 lbs

ADA24RGL

ADA Series • 24” ADA Glass Door Refrigerator

DIMENSIONS

Dimensions shown apply to all finishes.

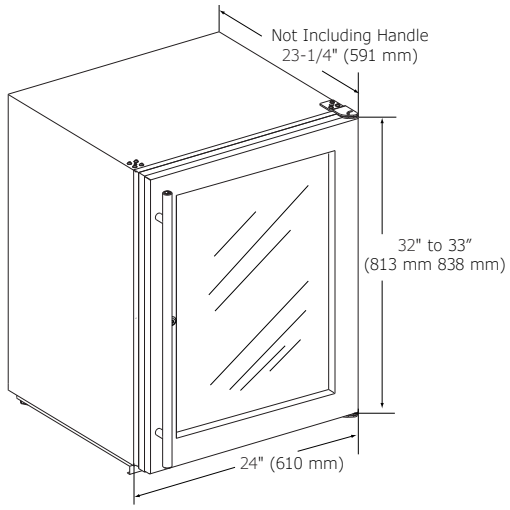

CABINET CUT-OUT

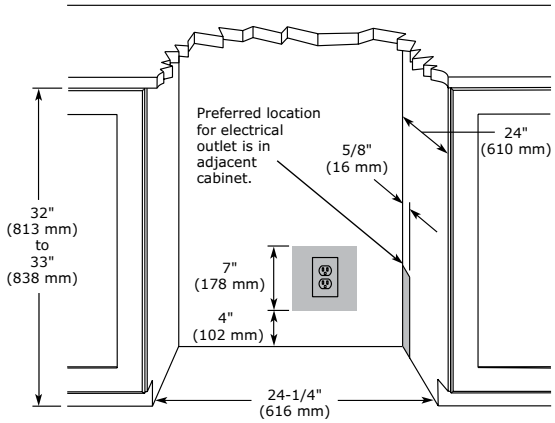

SPECIFICATIONS

Model	ADA24RGL
Amps: Running	1.2
Capacity: Bottle (12 oz)	70
Capacity: Can (12 oz)	140
Capacity: Volume (cu ft)	5.4
Control Type	Digital Touch Pad
Dimensions: Product Depth	23 ¼" / 591 mm
Dimensions: Product Height	32" / 813 mm
Dimensions: Product Width	24" / 610 mm
Energy Consumption: Avg. Per Year	300 kWh
ENERGY STAR	No
Product Weight: Max	122 lbs
Refrigerant Type	R600a
Sabbath (Star K Certified)	Yes
Temperature Range	34°F - 45°F

INSTALLATION NOTES

When installing adjacent to wall, ensure 2 ½” clearance on hinged side for 90° door opening, allowing ample room for door handle.
Cutout includes the additional ¼” width overall to ensure proper installation.
No additional clearance around sides, top or rear of unit is needed for ventilation.
Do not obstruct front grille air flow.

COOLING SYSTEM

CONVECTION COOLING SYSTEM

ELECTRICAL REQUIREMENTS

This unit requires a grounded a polarized 115 VAC, 60 Hz, 15 A power supply (normal household current).

Residential & Commercial

Please visit u-line.com to view this model’s User Guide.
All specifications are subject to change without notice.

Installed: 1215RSOD

Outdoor Series

	BI1215SOD	CLR1215SOD	1215RSOD	1224RSOD
	Outdoor Series			
Capacity: Bottle (12 oz)	na	na	57	123
Capacity: Can (12 oz)	na	na	92	185
Capacity: Volume (cu ft)	na	na	2.9	5.2
Control Type	On/Off Switch	Digital Touch Pad	Digital Touch Pad	Digital Touch Pad
Dimensions: Product Depth	23 ¼" / 591 mm	24" / 610 mm	23 ¼" / 591 mm	23 ¼" / 591 mm
Dimensions: Product Height	34 ⅛" / 867 mm	34 ⅛" / 867 mm	34 ⅛" / 867 mm	34 ⅛" / 867 mm
Dimensions: Product Width	14 15⁄16" / 379 mm*	14 15⁄16" / 379 mm*	14 15⁄16" / 379 mm*	24" / 610 mm*
Door Swing	Field Reversible	Field Reversible	Field Reversible	Field Reversible
Energy Consumption: Avg. Per Year	na	na	225 kWh	240 kWh
ENERGY STAR	na	na	ENERGY STAR	ENERGY STAR
Finishes	Stainless	Stainless	Stainless	Stainless
Ice Production Per Day	25 lbs	60 lbs	na	na
Ice Storage	25 lbs	30 lbs	na	na
Lock Model Available	No	No	Standard	Standard
Sabbath (Star K Certified)	No	Yes	Yes	Yes
Temperature Range	na	na	34°F - 45°F	34°F - 45°F
UL Listing	Yes**	Yes**	Residential / Commercial**	Residential / Commercial**

*The cutout requires an additional ¼" width overall to ensure proper installation.
**Deemed suitable for outdoor use by UL.

BI1215SOD

15” Outdoor Crescent Ice Maker • Outdoor Series

STAINLESS
SOLID (LOCK)

FEATURES & BENEFITS

PERFORMANCE	• Uses less than 3 gallons of water to produce up to 25 lbs of ice per day • Up to 25 lbs in ice storage capacity • Daily ice production rate is approx. 4 times greater than the average household refrigerator • Crescent ice cube dimensions: ½” W x ¾” H x ½” L • On/Off switch is conveniently located on lower face of unit
INTERIOR/EXTERIOR	• No drain required • Standard professional stainless steel handle is interchangeable with commercial handle accessory • Full stainless steel cabinet and door are deemed suitable for outdoor use by UL • Door swing is field reversible
INTEGRATION	• Unit is designed to be built-in or can be freestanding • Four independently adjustable leveling legs provide a precise undercounter fit

MODEL DETAILS

Model	Voltage	Door Swing	Finish	Shipping Weight
U-BI1215SOD-00A	115	Field Reversible	Stainless Solid (Lock)	89 lbs

ACCESSORIES

Model	Description	Finish	Shipping Weight
23050	Commercial Door Handle, ⅞” Diameter	Stainless	2 lbs

BI1215SOD

Outdoor Series • 15” Outdoor Crescent Ice Maker

DIMENSIONS

Dimensions shown apply to all finishes.

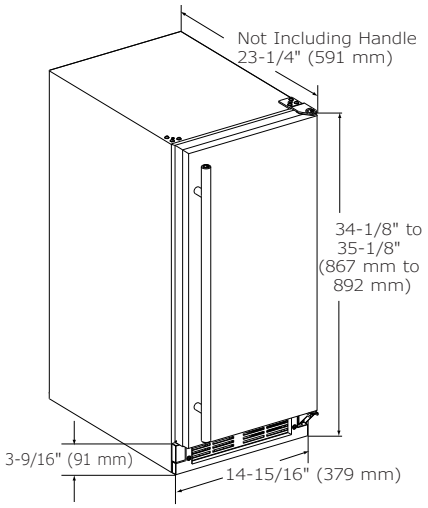

CABINET CUT-OUT

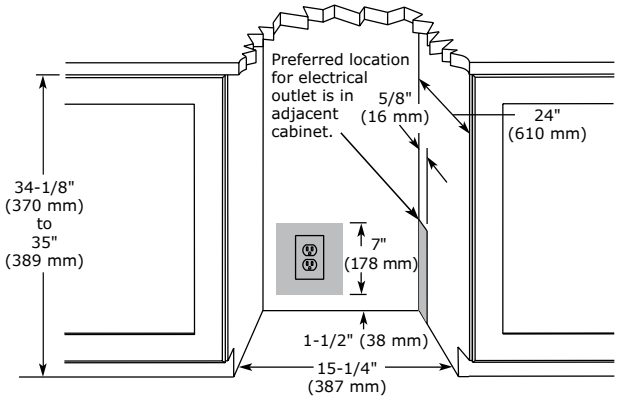

INSTALLATION NOTES

When installing adjacent to wall, ensure 2-1/2” clearance on hinged side for 90° door opening, allowing ample room for door handle.
No additional clearance around sides, top or rear of unit is needed for ventilation.
Do not obstruct front grille air flow.

SPECIFICATIONS

Model	BI1215SOD
Amps: Running	2.5
Control Type	On/Off Switch
Defrost Type	Manual
Dimensions: Depth	23 ¼" / 591 mm
Dimensions: Height	34 ⅛" / 867 mm
Dimensions: Width	14 15⁄16" / 379 mm
ENERGY STAR	na
Ice Production Per Day	25 lbs
Ice Storage	25 lbs
Product Weight: Max	83 lbs
Refrigerant Type	R134a
Sabbath (Star K Certified)	No

ELECTRICAL REQUIREMENTS

This unit requires a grounded a polarized 115 VAC, 60 Hz, 15 A power supply (normal household current).

Please visit u-line.com to view this model’s User Guide.
All specifications are subject to change without notice.

Deemed suitable for outdoor use by UL.

CLR1215SOD

15” Outdoor Clear Ice Machine • Outdoor Series

STAINLESS
SOLID (LOCK)

FEATURES & BENEFITS

PERFORMANCE	• Daily ice production of up to 60 lbs of ice • Up to 30 lbs in ice storage capacity • Clear ice cube dimensions: ⅞” W x ⅞” H x ⅞” L • Clear ice cube fullness can be adjusted • Silent setting temporarily suspends ice making for 3 hours • Digital Touch Pad Control is conveniently located on face of unit • Indicator alert notifies user when cleaning is needed • Easy clean process only lasts 45 minutes
INTERIOR/EXTERIOR	• White interior is illuminated with LED lighting • Clear heavy duty ice scoop included • Drain required • Factory installed drain line simplifies installation • Model can be ordered with factory installed P60 drain pump if gravity drain is not accessible • Standard professional stainless steel handle is interchangeable with commercial handle accessory • Full stainless steel cabinet and door are deemed suitable for outdoor use by UL • Door swing is field reversible
INTEGRATION	• Unit is designed to be built-in or can be freestanding • Four independently adjustable leveling legs provide a precise undercounter fit

MODEL DETAILS

Model	Voltage	Door Swing	Pump	Finish	Shipping Weight
U-CLR1215SOD-00A	115	Field Reversible	-	Stainless Solid	92 lbs
U-CLR1215SOD-40A	115	Field Reversible	Pump Included	Stainless Solid	101 lbs

ACCESSORIES

Model	Description	Finish	Shipping Weight
23050	Commercial Door Handle, ⅞” Diameter	Stainless	2 lbs
P60	Drain Pump	na	7 lbs

CLR1215SOD

Outdoor Series • 15” Outdoor Clear Ice Machine

DIMENSIONS

Dimensions shown apply to all finishes.

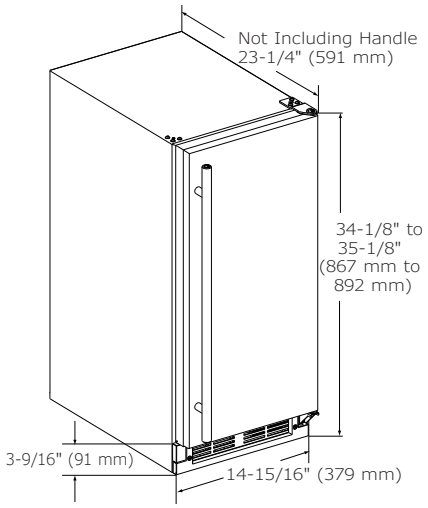

CABINET CUT-OUT

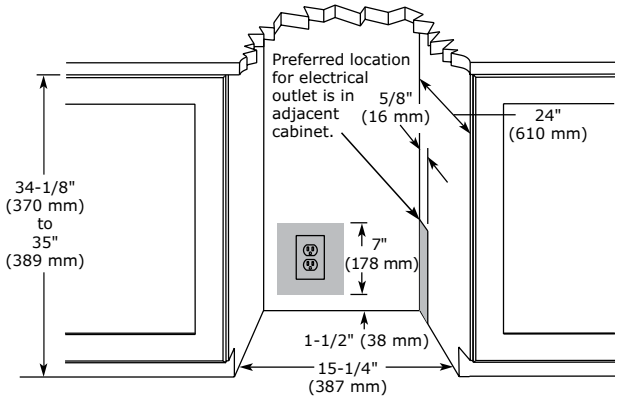

INSTALLATION NOTES

When installing adjacent to wall, ensure 2-1/2” clearance on hinged side for 90° door opening, allowing ample room for door handle.
No additional clearance around sides, top or rear of unit is needed for ventilation.
Do not obstruct front grille air flow.

SPECIFICATIONS

Model	CLR1215SOD
Amps: Running	4
Amps: Ice Harvest	5.5
Control Type	Digital Touch Pad
Defrost Type	Automatic
Dimensions: Depth	24" / 610 mm
Dimensions: Height	34 ⅛" / 867 mm
Dimensions: Width	14 15⁄16" / 379 mm
ENERGY STAR	na
Ice Production Per Day	60 lbs
Ice Storage	30 lbs
Product Weight: Max	91 lbs
Refrigerant Type	R134a
Sabbath (Star K Certified)	Yes

ELECTRICAL REQUIREMENTS

This unit requires a grounded a polarized 115 VAC, 60 Hz, 15 A power supply (normal household current).

Deemed suitable for outdoor use by UL.

Please visit u-line.com to view this model’s User Guide.
All specifications are subject to change without notice.

1215RSOD

15” Outdoor Refrigerator • Outdoor Series

STAINLES SOLID
(LOCK)

FEATURES & BENEFITS

PERFORMANCE	• Overall volume of 2.9 cu ft holds up to 57 bottles (12 oz) or 92 cans (12 oz) • Digital Touch Pad Control is conveniently located on upper face of unit • Temperature range: 34°F - 45°F • Digital passive cooling system
INTERIOR/EXTERIOR	• White interior is illuminated with LED lighting • Three removable tempered glass shelves • Standard professional stainless steel handle is interchangeable with commercial handle accessory • Full stainless steel cabinet and door are deemed suitable for outdoor use by UL • Door swing is field reversible • Door lock is standard
INTEGRATION	• Unit is designed to be built-in or can be freestanding • Four independently adjustable leveling legs provide a precise undercounter fit

MODEL DETAILS

Model	Voltage	Door Swing	Finish	Shipping Weight
U-1215RSOD-00A	115	Field Reversible	Stainless Solid (Lock)	83 lbs

ACCESSORIES

Model	Description	Finish	Shipping Weight
23050	Commercial Door Handle, ⅞” Diameter	Stainless	2 lbs

DIMENSIONS

Dimensions shown apply to all finishes.

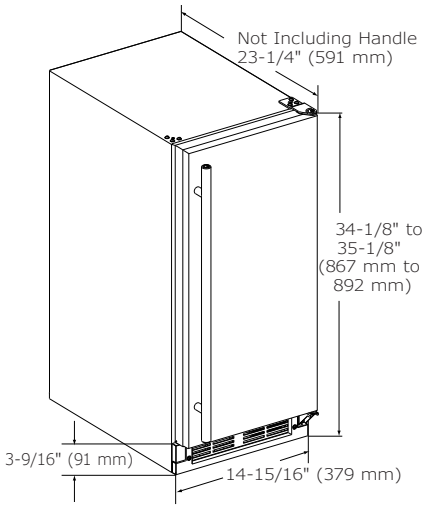

CABINET CUT-OUT

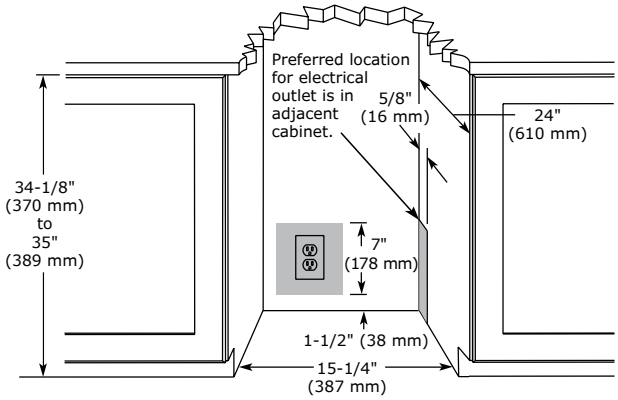

SPECIFICATIONS

Model	1215RSOD
Amps: Running	1.2
Capacity: Bottle (12 oz)	57
Capacity: Can (12 oz)	92
Capacity: Volume (cu ft)	2.9
Capacity: Wine Bottle (750 ml)	na
Control Type	Digital Touch Pad
Dimensions: Depth	23 ¼" / 591 mm
Dimensions: Height	34 ⅛" / 867 mm
Dimensions: Width	14 15⁄16" / 379 mm
Energy Consumption: Avg. Per Year	225 kWh
ENERGY STAR	ENERGY STAR
Product Weight: Max	76 lbs
Refrigerant Type	R600a
Sabbath (Star K Certified)	Yes
Temperature Range	34°F - 45°F

INSTALLATION NOTES

When installing adjacent to wall, ensure 2-1/2” clearance on hinged side for 90° door opening, allowing ample room for door handle.
Cutout includes the additional 1/4” width overall to ensure proper installation.
No additional clearance around sides, top or rear of unit is needed for ventilation.
Do not obstruct front grille air flow.

COOLING SYSTEM

ELECTRICAL REQUIREMENTS

This unit requires a grounded a polarized 115 VAC, 60 Hz, 15 A power supply (normal household current).

Residential &
Commercial
Deemed suitable for outdoor use by UL.

Please visit u-line.com to view this model’s User Guide.
All specifications are subject to change without notice.

1224RSOD

24” Outdoor Refrigerator • Outdoor Series

STAINLESS
SOLID (LOCK)

FEATURES & BENEFITS

PERFORMANCE	• Overall volume of 5.2 cu ft holds up to 123 bottles (12 oz) or 185 cans (12 oz) • Digital Touch Pad Control is conveniently located on upper face of unit • Temperature range: 34°F - 45°F • Digital passive cooling system
INTERIOR/EXTERIOR	• White interior is illuminated with LED lighting • Three removable tempered glass shelves • Standard professional stainless steel handle is interchangeable with commercial handle accessory • Full stainless steel cabinet and door are deemed suitable for outdoor use by UL • Door swing is field reversible • Door lock is standard
INTEGRATION	• Unit is designed to be built-in or can be freestanding with the freestanding accessory kit • Four independently adjustable leveling legs provide a precise undercounter fit

MODEL DETAILS

Model	Voltage	Door Swing	Finish	Shipping Weight
U-1224RSOD-00A	115	Field Reversible	Stainless Solid (Lock)	109 lbs

ACCESSORIES

Model	Description	Finish	Shipping Weight
23050	Commercial Door Handle, ⅞” Diameter	Stainless	2 lbs
U-FSK-S	Freestanding Kit	Stainless	3 lbs

1224RSOD

Outdoor Series • 24” Outdoor Refrigerator

DIMENSIONS

Dimensions shown apply to all finishes.

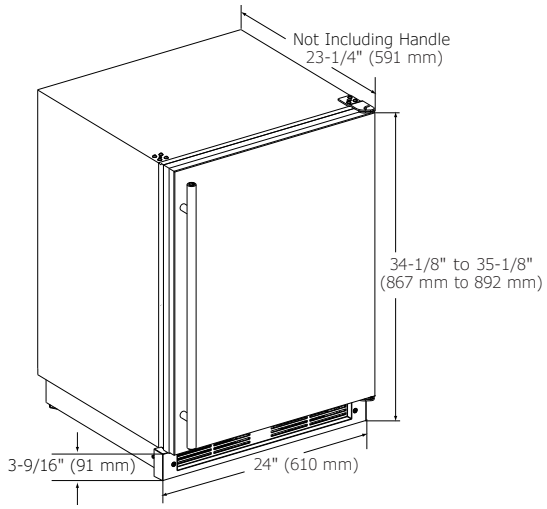

CABINET CUT-OUT

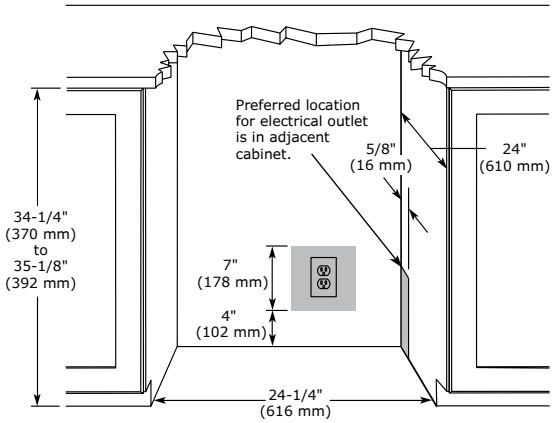

INSTALLATION NOTES

When installing adjacent to wall, ensure 2-1/2” clearance on hinged side for 90° door opening, allowing ample room for door handle.
Cutout includes the additional 1/4” width overall to ensure proper installation.
No additional clearance around sides, top or rear of unit is needed for ventilation.
Do not obstruct front grille air flow.

Please visit u-line.com to view this model’s User Guide.
All specifications are subject to change without notice.

SPECIFICATIONS

Model	1224RSOD
Amps: Running	1.2
Capacity: Bottle (12 oz)	123
Capacity: Can (12 oz)	185
Capacity: Volume (cu ft)	5.2
Control Type	Digital Touch Pad
Dimensions: Depth	23 ¼" / 591 mm
Dimensions: Height	34 ⅛" / 867 mm
Dimensions: Width	24" / 610 mm
Energy Consumption: Avg. Per Year	240 kWh
ENERGY STAR	ENERGY STAR
Product Weight: Max	99 lbs
Refrigerant Type	R600a
Sabbath (Star K Certified)	Yes
Temperature Range	34°F - 45°F

COOLING SYSTEM

ELECTRICAL REQUIREMENTS

This unit requires a grounded a polarized 115 VAC, 60 Hz, 15 A power supply (normal household current).

Residential &
Commercial
Deemed suitable for outdoor use by UL.

Installed: SS1095FC

Marine Series

	BI95FC	WH95FC	SS1095NF	SS1095FC	SS1095FD	SS98NF	SP18FC	CO29
	Marine Series							
Control Type	On/Off Switch	On/Off Switch	On/Off Switch	On/Off Switch	On/Off Switch	On/Off Switch	On/Off Switch	Mechanical Dial
Dimensions: Product Depth	17" / 432 mm	17" / 432 mm	17" / 432 mm	17" / 432 mm	17" / 432 mm	20" / 508 mm	24 ½" / 622 mm	23" / 584 mm
Dimensions: Product Height	25 ⅛" / 638 mm	25 1/16" / 637 mm	25 1/16" / 637 mm	25 ⅛" / 638 mm	26 1/16" / 662 mm	27 ⅜" / 695 mm	18 ⅞" / 479 mm	28 ½" / 724 mm
Dimensions: Product Width	14" / 356 mm	14" / 356 mm	14" / 356 mm	15 ⅛" / 384 mm	15 15/16" / 405 mm	14 15/16" / 379 mm	15 ⅛" / 384 mm	20 ⅞" / 530 mm
Door Swing	Field Reversible	Field Reversible	Field Reversible	Field Reversible	Field Reversible	Field Reversible	Field Reversible	Field Reversible
Energy Consumption: Avg. Per Year	na	na	na	na	na	na	na	na
ENERGY STAR	na	na	na	na	na	na	na	na
Finishes	Black	White	Stainless	Stainless	Stainless	Stainless	Stainless Black White	Black White
Ice Production Per Day	23 lbs	23 lbs	23 lbs	23 lbs	23 lbs	25 lbs	23 lbs	25 lbs
Ice Storage	12 lbs	12 lbs	12 lbs	12 lbs	12 lbs	25 lbs	12 lbs	13 lbs
Lock Model Available	Latch is Standard	Latch is Standard	Latch is Standard	Latch is Standard	Latch is Standard	Latch is Standard	Latch is Standard	Latch is Standard
Sabbath (Star K Certified)	No	No	No	No	No	No	No	No
Temperature Range	na	na	na	na	na	na	na	34°F - 45°F
UL Listing	Yes	Yes	Yes	Yes	Yes	Yes	Yes	Residential

BI95FC

14” Marine Crescent Ice Maker • Marine Series

BLACK SOLID
(FLANGE TO CABINET)

FEATURES & BENEFITS

PERFORMANCE	• Uses less than 3 gallons of water to produce up to 23 lbs of ice per day • Up to 12 lbs in ice storage capacity • Crescent ice cube dimensions: ½” W x ¾” H x ½” L • On/Off switch is conveniently located on the grille • Available in 115 or 220 - 240 volts
INTERIOR/EXTERIOR	• No drain required • Zero clearance door swing is field reversible • Standard travel package includes door latch and ice flap, ensuring safe-at-sea storage • Corrosion and UV resistant components
INTEGRATION	• Unit is designed to be built-in or can be freestanding • Accepts a ¼” custom panel • ½” flange mounts flush to cabinet

MODEL DETAILS

Model	Voltage	Door Swing	Finish	Shipping Weight
ULN-BI95FCB-03A	115	Field Reversible	Black Solid	61 lbs
ULN-BI95FCB-20A	220 - 240	Field Reversible	Black Solid	61 lbs

ACCESSORIES

Model	Description	Finish	Shipping Weight
WATERHOOKUP	Braided water supply line kit	na	2 lbs

BI95FC

Marine Series • 14” Marine Crescent Ice Maker

DIMENSIONS

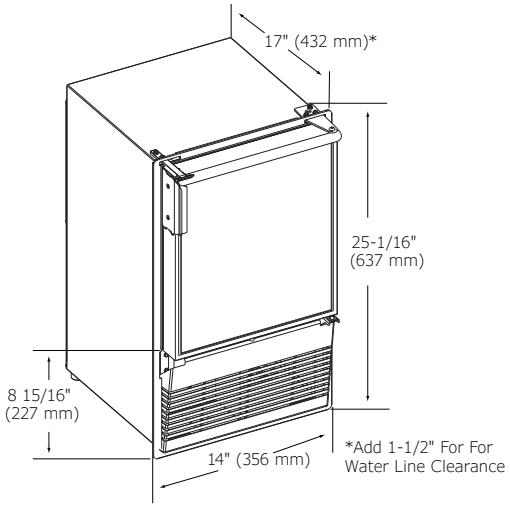

CABINET CUT-OUT

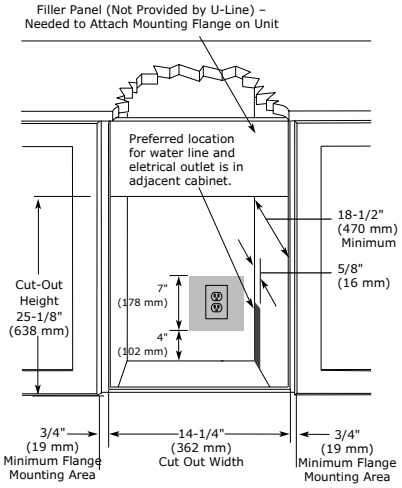

INSTALLATION NOTES

No additional clearance around sides, top or rear of unit is needed for ventilation.
Do not obstruct front grille air flow.

SPECIFICATIONS

Model	BI95FC
Amps: Running (115 v)	2.5
Amps: Running (220 - 240 v)	1.2
Amps: Max Start Up (115 v)	18
Amps: Max Start Up (220 - 240 v)	6
Control Type	on/off switch
Defrost Type	Manual
Dimensions: Product Depth	17" / 432 mm
Dimensions: Product Height	25 ⅛" / 638 mm
Dimensions: Product Width	14" / 356 mm
ENERGY STAR	na
Ice Production Per Day	23 lbs
Ice Storage	12 lbs
Product Weight: Max	55 lbs
Refrigerant Type	R134A
Sabbath (Star K Certified)	No

ELECTRICAL REQUIREMENTS

This unit requires a grounded a polarized 115 VAC, 60 Hz, 15 A power supply (normal household current).

UL listing only applies to 115 v models.

Please visit u-line.com to view this model’s User Guide.
All specifications are subject to change without notice.

WH95FC

14” Marine Crescent Ice Maker • Marine Series

WHITE SOLID
(FLANGE TO
CABINET)

FEATURES & BENEFITS

PERFORMANCE	• Uses less than 3 gallons of water to produce up to 23 lbs of ice per day • Up to 12 lbs in ice storage capacity • Crescent ice cube dimensions: ½” W x ¾” H x ½” L • On/Off switch is conveniently located on the grille • Available in 115 or 220 - 240 volts
INTERIOR/EXTERIOR	• No drain required • Zero clearance door swing is field reversible • Standard travel package includes door latch and ice flap, ensuring safe-at-sea storage • Corrosion and UV resistant components provide product longevity in harsh environments
INTEGRATION	• Unit is designed to be built-in or can be freestanding • Accepts a ¼” custom panel • ½” flange mounts flush to cabinet

MODEL DETAILS

Model	Voltage	Door Swing	Finish	Shipping Weight
ULN-WH95FCS-03A	115	Field Reversible (Flange to Cabinet)	White Solid	62 lbs
ULN-WH95FCS-20A	220 - 240	Field Reversible	White Solid	62 lbs

ACCESSORIES

Model	Description	Finish	Shipping Weight
WATERHOOKUP	Braided water supply line kit	na	2 lbs

WH95FC

Marine Series • 14” Marine Crescent Ice Maker

DIMENSIONS

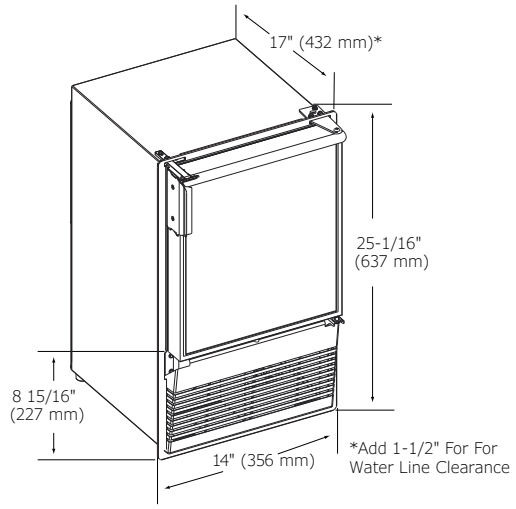

CABINET CUT-OUT

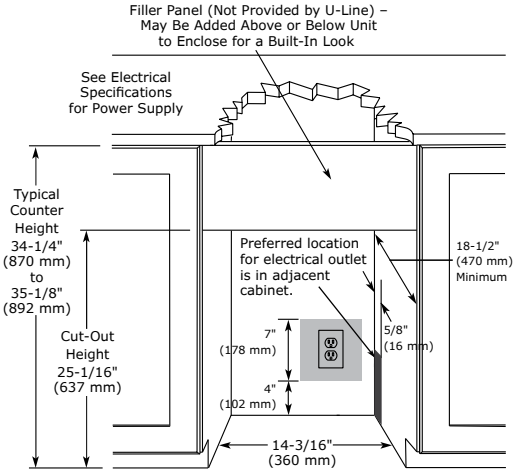

INSTALLATION NOTES

No additional clearance around sides, top or rear of unit is needed for ventilation.
Do not obstruct front grille air flow.

SPECIFICATIONS

Model	WH95FC
Amps: Running (115 v)	1.2
Amps: Running (220 - 240 v)	1.2
Amps: Max Start Up (115 v)	18
Amps: Max Start Up (220 - 240 v)	6
Control Type	On/Off Switch
Defrost Type	Manual
Dimensions: Product Depth	17" / 432 mm
Dimensions: Product Height	25 1/16" / 637 mm
Dimensions: Product Width	14" / 356 mm
ENERGY STAR	na
Ice Production Per Day	23 lbs
Ice Storage	12 lbs
Product Weight: Max	56 lbs
Refrigerant Type	R134A
Sabbath (Star K Certified)	No

ELECTRICAL REQUIREMENTS

This unit requires a grounded a polarized 115 VAC, 60 Hz, 15 A power supply (normal household current).

UL listing only applies to 115 v models.

Please visit u-line.com to view this model’s User Guide.
All specifications are subject to change without notice.

SS1095

14” Marine Crescent Ice Maker • Marine Series

STAINLESS
SOLID
(FLUSH TO CABINET)

STAINLESS
SOLID
(FLUSH TO DOOR)

STAINLESS
SOLID
(NO FLANGE)

FEATURES & BENEFITS

PERFORMANCE	• Uses less than 3 gallons of water to produce up to 23 lbs of ice per day • Up to 12 lbs in ice storage capacity • Crescent ice cube dimensions: ½” W x ¾” H x ½” L • On/Off switch is conveniently located on the grille • Available in 115 or 220 - 240 volts
INTERIOR/EXTERIOR	• No drain required • Zero clearance door swing is field reversible • Standard travel package includes door latch and ice flap, ensuring safe-at-sea storage • Corrosion and UV resistant components
INTEGRATION	• Unit is designed to be built-in or can be freestanding • Multiple flange options

MODEL DETAILS

Model	Voltage	Door Swing	Finish	Shipping Weight
ULN-SS1095FCS-03A	115	Field Reversible (Flush to Cabinet)	Stainless Solid	66 lbs
ULN-SS1095FCS-20A	220 - 240	Field Reversible (Flush to Cabinet)	Stainless Solid	66 lbs
ULN-SS1095FDS-03A	115	Field Reversible (Flush to Door)	Stainless Solid	66 lbs
ULN-SS1095FDS-20A	220 - 240	Field Reversible (Flush to Door)	Stainless Solid	66 lbs
ULN-SS1095NFS-03A	115	Field Reversible (No Flange)	Stainless Solid	66 lbs
ULN-SS1095NFS-20A	220 - 240	Field Reversible (No Flange)	Stainless Solid	66 lbs

ACCESSORIES

Model	Description	Finish	Shipping Weight
WATERHOOKUP	Braided water supply line kit	na	2 lbs

SS1095

Marine Series • 14” Marine Crescent Ice Make

DIMENSIONS

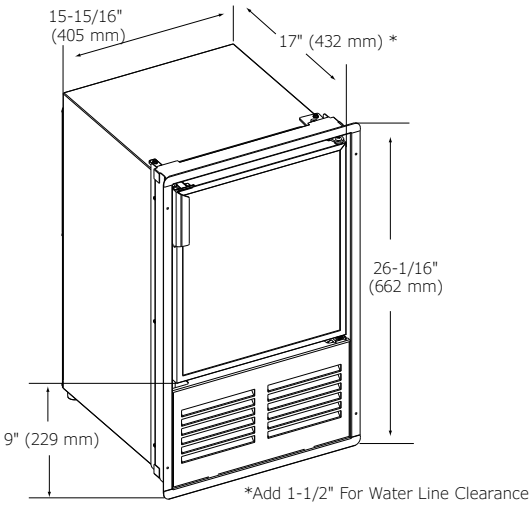

CABINET CUT-OUT

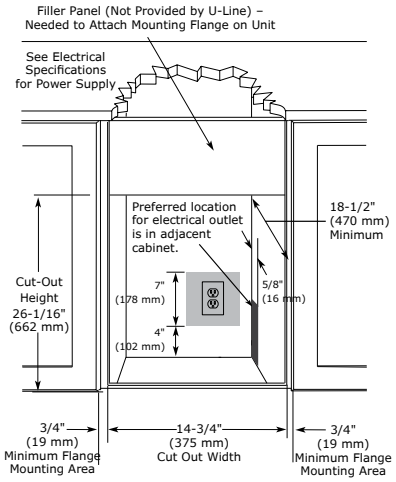

INSTALLATION NOTES

No additional clearance around sides, top or rear of unit is needed for ventilation.
Do not obstruct front grille air flow.

SPECIFICATIONS

Model	SS1095
Amps: Running (115 v)	2.5
Amps: Running (220 - 240 v)	1.2
Amps: Max Start Up (115 v)	18
Amps: Max Start Up (220 - 240 v)	6
Control Type	on/off switch
Defrost Type	Manual
Dimensions (NF): Product Depth	17” / 432 mm
Dimensions (NF): Product Height	25 1⁄16” / 637 mm
Dimensions (NF): Product Width	14” / 356 mm
Dimensions (FC): Product Depth	17” / 432 mm
Dimensions (FC): Product Height	25 1⁄8” / 638 mm
Dimensions (FC): Product Width	15 1⁄8” / 384 mm
Dimensions (FD): Product Depth	17" / 432 mm
Dimensions (FD): Product Height	26 1⁄16" / 662 mm
Dimensions (FD): Product Width	15 15⁄16" / 405 mm
ENERGY STAR	na
Ice Production Per Day	23 lbs
Ice Storage	12 lbs
Product Weight: Max	60 lbs
Refrigerant Type	R134A
Sabbath (Star K Certified)	No

ELECTRICAL REQUIREMENTS

This unit requires a grounded a polarized 115 VAC, 60 Hz, 15 A power supply (normal household current).

UL listing only applies to 115 v models.

Please visit u-line.com to view this model’s User Guide.
All specifications are subject to change without notice.

SS98NF

15” Marine Crescent Ice Maker • Marine Series

STAINLESS
SOLID
(NO FLANGE)

FEATURES & BENEFITS

PERFORMANCE	• Uses less than 3 gallons of water to produce up to 25 lbs of ice per day • Up to 25 lbs in ice storage capacity • Crescent ice cube dimensions: ½” W x ¾” H x ½” L • On/Off switch is conveniently located on the grille
INTERIOR/EXTERIOR	• No drain required • Zero clearance door swing is field reversible • Standard travel package includes door latch and ice flap, ensuring safe-at-sea storage • Corrosion and UV resistant components
INTEGRATION	• Unit is designed to be built-in or can be freestanding • Accepts a ¼” custom panel

MODEL DETAILS

Model	Voltage	Door Swing	Finish	Shipping Weight
ULN-SS98NFS-03A	115	Field Reversible (No Flange)	Stainless Solid	74 lbs
ULN-SS98NFS-20A	220 - 240	Field Reversible (No Flange)	Stainless Solid	73 lbs

ACCESSORIES

Model	Description	Finish	Shipping Weight
WATERHOOKUP	Braided water supply line kit	na	2 lbs

SS98NF

Marine Series • 15” Marine Crescent Ice Maker

DIMENSIONS

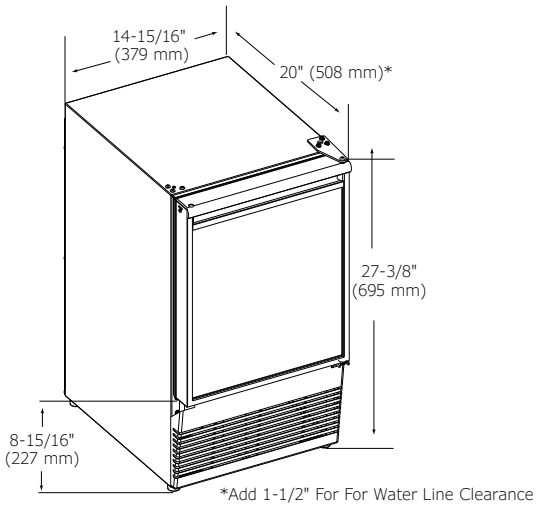

CABINET CUT-OUT

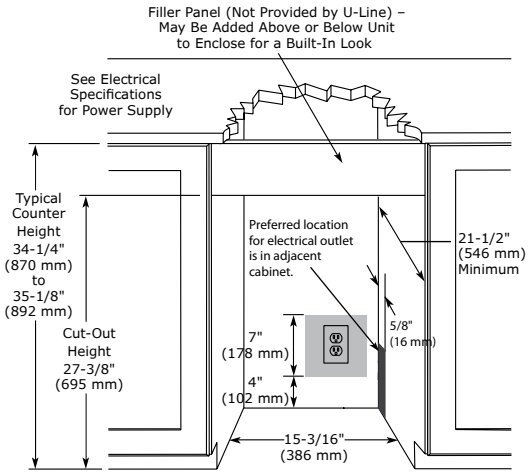

INSTALLATION NOTES

No additional clearance around sides, top or rear of unit is needed for ventilation.
Do not obstruct front grille air flow.

SPECIFICATIONS

Model	SS98NF
Amps: Running (115 v)	2.5
Amps: Running (220 - 240 v)	1.2
Amps: Max Start Up (115 v)	18
Amps: Max Start Up (220 - 240 v)	6
Control Type	On/Off Switch
Defrost Type	Manual
Dimensions: Product Depth	20" / 508 mm
Dimensions: Product Height	27 ⅜" / 695 mm
Dimensions: Product Width	14 15⁄16" / 379 mm
ENERGY STAR	na
Ice Production Per Day	25 lbs
Ice Storage	25 lbs
Product Weight: Max	68 lbs
Refrigerant Type	R134A
Sabbath (Star K Certified)	No

ELECTRICAL REQUIREMENTS

This unit requires a grounded a polarized 115 VAC, 60 Hz, 15 A power supply (normal household current).

UL listing only applies to 115 v models.

Please visit u-line.com to view this model’s User Guide.
All specifications are subject to change without notice.

SP18FC

15” Marine Crescent Ice Maker • Marine Series

STAINLESS SOLID

BLACK SOLID

WHITE SOLID

FEATURES & BENEFITS

PERFORMANCE	• Uses less than 3 gallons of water to produce up to 23 lbs of ice per day • Up to 12 lbs in ice storage capacity • Crescent ice cube dimensions: ½” W x ¾” H x ½” L • On/Off switch is conveniently located on the grille • Available in 115 or 220 - 240 volts
INTERIOR/EXTERIOR	• No drain required • Zero clearance door swing is field reversible • Standard travel package includes door latch and ice flap, ensuring safe-at-sea storage • Corrosion and UV resistant components provide product longevity in harsh environments
INTEGRATION	• Unit is designed to be built-in or can be freestanding • Accepts a ¼” custom panel • ½” flange mounts flush to cabinet

MODEL DETAILS

Model	Voltage	Door Swing	Finish	Shipping Weight
ULN-SP18FCS-03A	115	Field Reversible	Stainless Solid	65 lbs
ULN-SP18FCS-20A	220 - 240	Field Reversible	Stainless Solid	65 lbs
ULN-SP18FCB-03A	115	Field Reversible	Black Solid	68 lbs
ULN-SP18FCB-20A	220 - 240	Field Reversible	Black Solid	68 lbs
ULN-SP18FCW-03A	115	Field Reversible	White Solid	68 lbs
ULN-SP18FCW-20A	220 - 240	Field Reversible	White Solid	68 lbs

ACCESSORIES

Model	Description	Finish	Shipping Weight
WATERHOOKUP	Braided water supply line kit	na	2 lbs

SP18FC

Marine Series • 15” Marine Crescent Ice Maker

DIMENSIONS

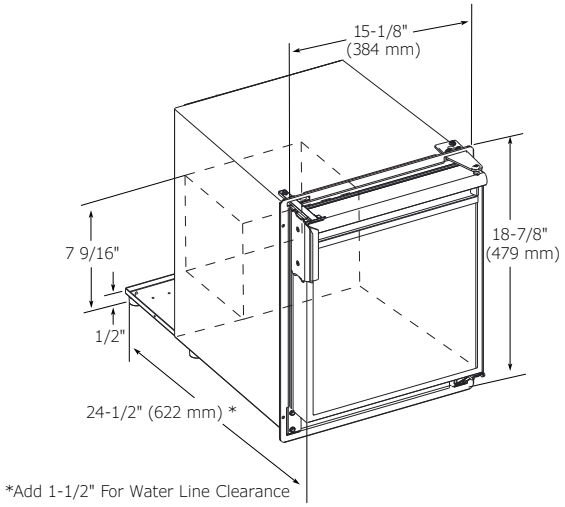

CABINET CUT-OUT

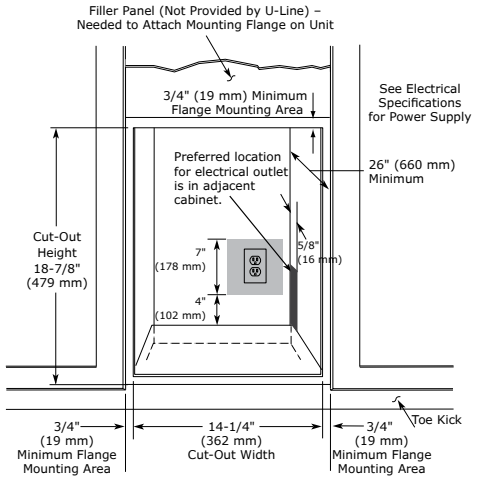

INSTALLATION NOTES

No additional clearance around sides, top or rear of unit is needed for ventilation.
Do not obstruct front grille air flow.

SPECIFICATIONS

Model	SP18FC
Amps: Running (115 v)	2.5
Amps: Running (220 - 240 v)	1.2
Amps: Max Start Up (115 v)	18
Amps: Max Start Up (220 - 240 v)	6
Control Type	Mechanical Dial
Defrost Type	Manual
Dimensions: Product Depth	24 ½" / 622 mm
Dimensions: Product Height	18 ⅞" / 479 mm
Dimensions: Product Width	15 ⅛" / 384 mm
ENERGY STAR	na
Ice Production Per Day	23 lbs
Ice Storage	12 lbs
Product Weight: Max	59 lbs
Refrigerant Type	R134A
Sabbath (Star K Certified)	No

ELECTRICAL REQUIREMENTS

This unit requires a grounded a polarized 115 VAC, 60 Hz, 15 A power supply (normal household current).

UL listing only applies to 115 v models.

Please visit u-line.com to view this model’s User Guide.
All specifications are subject to change without notice.

CO29

21″ Marine Combo® Model • Marine Series

BLACK
SOLID

WHITE
SOLID

FEATURES & BENEFITS

PERFORMANCE	• Refrigerator volume of 2.1 cu ft holds up to 24 bottles (12 oz) or 44 cans (12 oz) • Mechanical Dial Control is conveniently located on the grille • Temperature range: 34°F - 45°F • Produces and stores up to 8 lbs of ice per day • Crescent ice cube dimensions: ½″ W x ¾″ H x ½″ L • Available in 115 or 220 - 240 volts
INTERIOR/EXTERIOR	• No drain required • Two removable tempered glass shelves • Two fixed storage compartments in door • Door swing is field reversible • Standard travel package includes door latch and ice flap, ensuring safe-at-sea storage • Corrosion and UV resistant components provide product longevity in harsh environments
INTEGRATION	• Unit is designed to be built-in or can be freestanding • Available in the following finishes: Black or White • Accepts a ¼″ custom panel

MODEL DETAILS

Model	Voltage	Door Swing	Finish	Shipping Weight
ULN-CO29B-03A	115	Right-Hand Hinge	Black Solid	94 lbs
ULN-CO29B-20A	220 - 240	Right-Hand Hinge	Black Solid	94 lbs
ULN-CO29W-03A	115	Right-Hand Hinge	White Solid	94 lbs
ULN-CO29W-20A	220 - 240	Right-Hand Hinge	White Solid	94 lbs

ACCESSORIES

Model	Description	Finish	Shipping Weight
WATERHOOKUP	Braided water supply line kit	na	2 lbs

DIMENSIONS

Dimensions shown apply to all finishes.

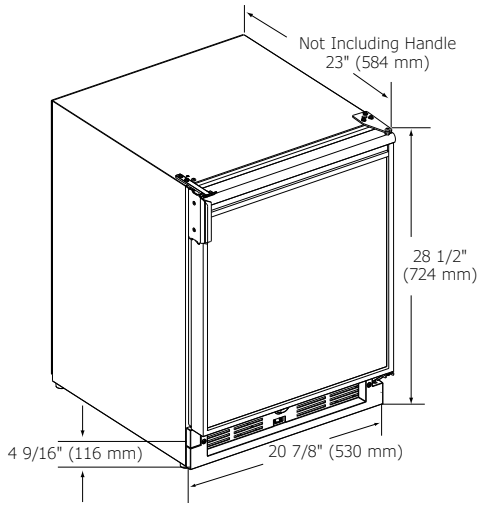

CABINET CUT-OUT

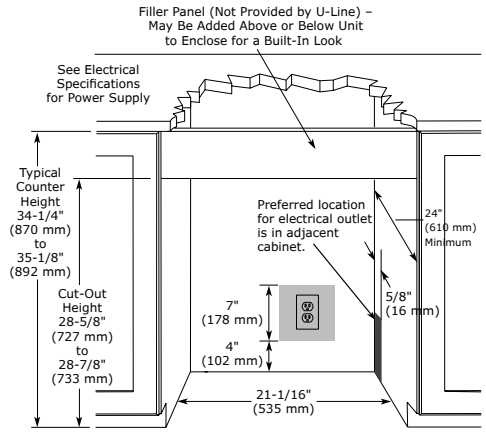

INSTALLATION NOTES

Cutout includes the additional ¼” width overall to ensure proper installation.
No additional clearance around sides, top or rear of unit is needed for ventilation.
Do not obstruct front grille air flow.

UL listing only applies to 115 v models.

Please visit u-line.com to view this model’s User Guide.
All specifications are subject to change without notice.

SPECIFICATIONS

Model	CO29
Amps: Running (115 v)	2.5
Amps: Running (220 - 240 v)	1.2
Amps: Max Start Up (115 v)	18
Amps: Max Start Up (220 - 240 v)	6
Capacity: Bottle (12 oz)	24
Capacity: Can (12 oz)	44
Capacity: Volume (cu ft)	2.1
Control Type	Mechanical Dial
Defrost Type	Manual
Dimensions: Product Depth	23" / 584 mm
Dimensions: Product Height	28 ½" / 724 mm
Dimensions: Product Width	20 ⅞" / 530 mm
ENERGY STAR	na
Ice Production Per Day	25 lbs
Ice Storage	13 lbs
Product Weight: Max	85 lbs
Refrigerant Type	R134A
Sabbath (Star K Certified)	No
Temperature Range	34°F - 45°F

ELECTRICAL REQUIREMENTS

This unit requires a grounded a polarized 115 VAC, 60 Hz, 15 A power supply (normal household current).

Residential

Models at a Glance

	Wine Captain® Models							
	1024WC	1215WC	1224WC	2218WC	2224ZWC	3018WC	3024ZWC	3036WCWC
	1000 Series			2000 Series		3000 Series		
Capacity: Bottle (12 oz)	na	na	na	na	na	na	na	na
Capacity: Can (12 oz)	na	na	na	na	na	na	na	na
Capacity: Wine Bottle (750 ml)	48	24	48	31	43	31	43	62
Capacity: Volume (cu ft)	5.2	2.9	5.2	3.6	4.7	3.6	4.7	7.0
Control Type	Mechanical Dial	Digital Touch Pad	Digital Touch Pad	Digital Touch Pad	Digital Touch Pad	U-Select®	U-Select®	U-Select®
Dimensions: Product Depth	23 ¼" / 591 mm	23 ¼" / 591 mm	23 ¼" / 591 mm	23 7⁄16" / 590 mm	23 7⁄16" / 590 mm	23 7⁄16" / 590 mm	23 7⁄16" / 590 mm	23 7⁄16" / 590 mm
Dimensions: Product Height	34 ⅛" / 867 mm	34 ⅛" / 867 mm	34 ⅛" / 867 mm	33 11⁄16" / 856 mm	33 11⁄16" / 856 mm	33 11⁄16" / 856 mm	33 11⁄16" / 856 mm	33 11⁄16" / 856 mm
Dimensions: Product Width	24" / 610 mm	14 15⁄16" / 379 mm	24" / 610 mm	17 ¾" / 450 mm	23 ⅝" / 600 mm	17 ¾" / 450 mm	23 ⅝" / 600 mm	35 7⁄16" / 900 mm
Door Swing	Field Reversible	Field Reversible	Field Reversible	Right or Left	Right or Left	Right or Left	Right or Left	Double Doors
Energy Consumption: Avg. Per Year	250 kWh	250 kWh	250 kWh	250 kWh	250 kWh	250 kWh	250 kWh	250 kWh
ENERGY STAR	na	na	na	na	na	na	na	na
Finishes	S	S, INT, B	S, INT, B	S, INT	S, INT	S, INT	S, INT	S, INT
Ice Production Per Day	na	na	na	na	na	na	na	na
Ice Storage	na	na	na	na	na	na	na	na
Lock Model Available	No	No	Yes	No	Yes	Yes	Yes	Yes
Sabbath (Star K Certified)	No	Yes	Yes	Yes	Yes	Yes	Yes	Yes
Temperature Range	40°F - 60°F	38°F - 65°F	38°F - 65°F	38°F - 65°F	34°F - 65°F	38°F - 65°F	34°F - 65°F	38°F - 65°F
UL Listing	Residential	Residential / Commercial	Residential / Commercial	Residential	Residential	Residential	Residential	Residential

Specifications subject to change without notice. Sizes are for reference only. For safety, installation, integration, operation, maintenance, and service details please visit u-line.com and view the User Guides listed under 'Documentation'.

Beverage Centers					Clear Ice Machines		Crescent Ice Makers			
1024BEV	1224BEV	2224BEV	3024BEV	3036BVWC	CLR1215	3018CLR	BI95	BI98	ADA15IM	BI1215
1000 Series		2000 Series	3000 Series		1000 Series	3000 Series	ADA Series			1000 Series
85	85	79	79	79	na	na	na	na	na	na
105	105	123	123	123	na	na	na	na	na	na
16	16	10	10	31	na	na	na	na	na	na
5.4	5.4	4.9	4.8	7.0	na	na	na	na	na	na
Mechanical Dial	Digital Touch Pad	Digital Touch Pad	U-Select®	U-Select®	Digital Touch Pad	U-Select®	On/Off Switch	On/Off Switch	On/Off Switch	On/Off Switch
23 ¼" / 591 mm	23 ¼" / 591 mm	23 7⁄16" / 590 mm	23 7⁄16" / 590 mm	23 7⁄16" / 590 mm	24" / 610 mm	24" / 610 mm	17″ / 432 mm	20" / 508 mm	23" / 584 mm	23 ¼" / 591 mm
34 ⅛" / 867 mm	34 ⅛" / 867 mm	33 11⁄16" / 856 mm	33 11⁄16" / 856 mm	33 11⁄16" / 856 mm	34 ⅛" / 867 mm	33 11⁄16" / 856 mm	25 1⁄16" / 637 mm	27 ⅜" / 695 mm	32" / 813 mm	34 ⅛" / 867 mm
24" / 610 mm	24" / 610 mm	23 ⅝" / 600 mm	23 ⅝" / 600 mm	35 7⁄16" / 900 mm	14 15⁄16" / 379 mm	17 ¾" / 450 mm	13 15⁄16" / 354 mm	14 15⁄16" / 379 mm	14 15⁄16" / 379 mm	14 15⁄16" / 379 mm
Field Reversible	Field Reversible	Right or Left	Right or Left	Double Doors	Field Reversible	Right or Left	Field Reversible	Field Reversible	Field Reversible	Field Reversible
305 kWh	305 kWh	300 kWh	300 kWh	321.5 kWh	na	na	na	na	na	na
No	No	No	No	No	na	na	na	na	na	na
S	S, INT	S, INT	S, INT	S, INT	S, INT, B, W	S, INT	B, W	B, W	S, B	S, INT, B, W
na	na	na	na	na	60 lbs	60 lbs	23 lbs	25 lbs	25 lbs	25 lbs
na	na	na	na	na	30 lbs	30 lbs	12 lbs	25 lbs	25 lbs	25 lbs
No	Yes	Yes	Yes	Yes	No	No	No	No	No	No
No	Yes	Yes	Yes	Yes	Yes	Yes	No	No	No	No
34°F - 45°F	34°F - 45°F	34°F - 45°F	34°F - 70°F	38°F - 65°F / 34°F - 70°F	na	na	na	na	na	na
Residential	Residential / Commercial	Residential	Residential	Residential	Yes	Yes	Yes	Yes	Yes	Yes

Models at a Glance

	Glass Door Refrigerators					Solid Door Refrigerators		
	2218RGL	2224RGL	3018RGL	3024RGL	3036RRGL	1215R	1224R	2218R
	2000 Series		3000 Series			1000 Series		2000 Series
Capacity: Bottle (12 oz)	79	114	79	114	158	57	123	79
Capacity: Can (12 oz)	123	172	123	172	246	92	185	123
Capacity: Wine Bottle (750 ml)	na	na	na	na	na	na	na	na
Capacity: Volume (cu ft)	3.6	4.9	3.6	4.9	6.9	2.9	5.2	3.4
Control Type	Digital Touch Pad	Digital Touch Pad	U-Select®	U-Select®	U-Select®	Digital Touch Pad	Digital Touch Pad	Digital Touch Pad
Dimensions: Product Depth	23 7/16" / 590 mm	23 7/16" / 590 mm	23 7/16" / 590 mm	23 7/16" / 590 mm	23 7/16" / 590 mm	23 1/4" / 591 mm	23 1/4" / 591 mm	23 7/16" / 590 mm
Dimensions: Product Height	33 11/16" / 856 mm	33 11/16" / 856 mm	33 11/16" / 856 mm	33 11/16" / 856 mm	33 11/16" / 856 mm	34 1/8" / 867 mm	34 1/8" / 867 mm	33 11/16" / 856 mm
Dimensions: Product Width	17 3/4" / 450 mm	23 5/8" / 600 mm	17 3/4" / 450 mm	23 5/8" / 600 mm	35 7/16" / 900 mm	14 15/16" / 379 mm	24" / 610 mm	17 3/4" / 450 mm
Door Swing	Right or Left	Right or Left	Right or Left	Right or Left	Double Doors	Field Reversible	Field Reversible	Right or Left
Energy Consumption: Avg. Per Year	290 kWh	300 kWh	290 kWh	300 kWh	320 kWh	225 kWh	240 kWh	230 kWh
ENERGY STAR	No	No	No	No	No	ENERGY STAR	ENERGY STAR	ENERGY STAR
Finishes	S, INT	S, INT	S, INT	S, INT	S, INT	S, INT, B	S, INT, B, W	S, INT
Ice Production Per Day	na	na	na	na	na	na	na	na
Ice Storage	na	na	na	na	na	na	na	na
Lock Model Available	No	Yes	Yes	Yes	Yes	No	No	No
Sabbath (Star K Certified)	Yes	Yes	Yes	Yes	Yes	Yes	Yes	Yes
Temperature Range	34°F - 45°F	34°F - 45°F	34°F - 70°F	34°F - 70°F	34°F - 70°F	34°F - 45°F	34°F - 45°F	34°F - 45°F
UL Listing	Residential	Residential	Residential	Residential	Residential	Residential / Commercial	Residential / Commercial	Residential

Specifications subject to change without notice. Sizes are for reference only. For safety, installation, integration, operation, maintenance, and service details please visit u-line.com and view the User Guides listed under 'Documentation'.

Solid Door Refrigerators				Drawer Models		Freezers	Combo® Models	
2224R	3018R	3024R	3036RR	1224DWR	3024DWR	3024FZR	CO1224F	1224RF
2000 Series	3000 Series			1000 Series	3000 Series	3000 Series	1000 Series	
114	68	100	136	98	90	na	61	61
172	104	141	208	150	142	na	114	114
na	na	na	na	na	na	na	na	na
4.9	3.4	4.9	6.9	5.4	4.5	4.5	4.2	Ref: 4.2 Fzr: 1.5
Digital Touch Pad	U-Select®	U-Select®	U-Select®	Digital Touch Pad	U-Select®	U-Select®	Digital Touch Pad	Digital Touch Pad
23 7/16" / 590 mm	23 7/16" / 590 mm	23 7/16" / 590 mm	23 7/16" / 590 mm	23 1/4" / 591 mm	23 7/16" / 590 mm	24" / 610 mm	23 1/4" / 591 mm	23 1/4" / 591 mm
33 11/16" / 856 mm	33 11/16" / 856 mm	33 11/16" / 856 mm	33 11/16" / 856 mm	34 1/8" / 867 mm	33 11/16" / 856 mm	33 11/16" / 856 mm	34 1/8" / 867 mm	34 1/8" / 867 mm
23 5/8" / 600 mm	17 3/4" / 450 mm	23 5/8" / 600 mm	35 7/16" / 900 mm	24" / 610 mm	23 5/8" / 600 mm	23 5/8" / 600 mm	24" / 610 mm	24" / 610 mm
Right or Left	Right or Left	Right or Left	Double Doors	Drawers	Drawers	Right or Left	Field Reversible	Field Reversible
240 kWh	245 kWh	240 kWh	320 kWh	305 kWh	300 kWh	430 kWh	580 kWh	496 kWh
ENERGY STAR	ENERGY STAR	ENERGY STAR	No	No	No	No	No	No
S, INT	S, INT	S, INT	S, INT	S, INT	S, INT	S, INT	S, INT, B, W	S, INT, B, W
na	na	na	na	na	na	na	8 lbs	na
na	na	na	na	na	na	na	8 lbs	na
No	No	No	No	No	No	No	No	No
Yes	Yes	Yes	Yes	Yes	Yes	Yes	Yes	Yes
34°F - 45°F	34°F - 70°F	34°F - 70°F	34°F - 70°F	34°F - 45°F	34°F - 70°F	-5°F - 5°F	34°F - 45°F	Ref: 34°F - 45°F Freezer: 0°F - 5°F
Residential	Residential	Residential	Residential	Residential / Commercial	Residential	Residential	Residential	Residential

Models at a Glance

	ADA Series							Outdoor Series	
	BI95	BI98	ADA15IM	29R	CO29F	ADA24R	ADA24RGL	BI1215SOD	CLR1215SOD
	ADA Series							Outdoor Series	
Capacity: Bottle (12 oz)	na	na	na	35	24	70	70	na	na
Capacity: Can (12 oz)	na	na	na	48	44	140	140	na	na
Capacity: Wine Bottle (750 ml)	na	na	na	na	na	na	na	na	na
Capacity: Volume (cu ft)	na	na	na	3.3	2.1	5.3	5.4	na	na
Control Type	On/Off Switch	On/Off Switch	On/Off Switch	Mechanical Dial	Mechanical Dial	Digital Touch Pad	Digital Touch Pad	On/Off Switch	Digital Touch Pad
Dimensions: Product Depth	17" / 432 mm	20" / 508 mm	23" / 584 mm	23" / 584 mm	23" / 584 mm	23 ¼" / 591 mm	23 ¼" / 591 mm	23 ¼" / 591 mm	24" / 610 mm
Dimensions: Product Height	25 1/16" / 637 mm	27 3/8" / 695 mm	32" / 813 mm	28 ½" / 724 mm	28 ½" / 724 mm	32" / 813 mm	32" / 813 mm	34 ⅛" / 867 mm	34 ⅛" / 867 mm
Dimensions: Product Width	13 15/16" / 354 mm	14 15/16" / 379 mm	14 15/16" / 379 mm	20 7/8" / 530 mm	20 7/8" / 530 mm	24" / 610 mm	24" / 610 mm	14 15/16" / 379 mm	14 15/16" / 379 mm
Door Swing	Field Reversible	Field Reversible	Field Reversible	Field Reversible*	Field Reversible	Field Reversible	Field Reversible	Field Reversible	Field Reversible
Energy Consumption: Avg. Per Year	na	na	na	230 kWh	567 kWh	240 kWh	300 kWh	na	na
ENERGY STAR	na	na	na	ENERGY STAR	No	ENERGY STAR	No	na	na
Finishes	B, W	B, W	S, B	B, W	B, W	S, B	S, B	S	S
Ice Production Per Day	23 lbs	25 lbs	25 lbs	na	8 lbs	na	na	25 lbs	60 lbs
Ice Storage	12 lbs	25 lbs	25 lbs	na	8 lbs	na	na	25 lbs	30 lbs
Lock Model Available	No	No	No	Yes	No	Standard	Standard	No	No
Sabbath (Star K Certified)	No	No	No	No	No	Yes	Yes	No	Yes
Temperature Range	na	na	na	34°F - 45°F	34°F - 45°F	34°F - 45°F	34°F - 45°F	na	na
UL Listing	Yes	Yes	Yes	Residential / Commercial	Residential	Residential / Commercial	Residential / Commercial	Yes**	Yes**

Specifications subject to change without notice. Sizes are for reference only. For safety, installation, integration, operation, maintenance, and service details please visit u-line.com and view the User Guides listed under 'Documentation'.

Outdoor Series		Marine Series							
1215RSOD	1224RSOD	BI95FC	WH95FC	SS1095NF	SS1095FC	SS1095FD	SS98NF	SP18FC	CO29
Outdoor Series		Marine Series							
57	123	na	na	na	na	na	na	na	24
92	185	na	na	na	na	na	na	na	44
na	na	na	na	na	na	na	na	na	na
2.9	5.2	na	na	na	na	na	na	na	2.1
Digital Touch Pad	Digital Touch Pad	On/Off Switch	On/Off Switch	On/Off Switch	On/Off Switch	On/Off Switch	On/Off Switch	On/Off Switch	Mechanical Dial
23 ¼" / 591 mm	23 ¼" / 591 mm	17" / 432 mm	17" / 432 mm	17" / 432 mm	17" / 432 mm	17" / 432 mm	20" / 508 mm	24 ½" / 622 mm	23" / 584 mm
34 ⅛" / 867 mm	34 ⅛" / 867 mm	25 1/16" / 637 mm	25 1/16" / 637 mm	25 1/16" / 637 mm	25 ⅛" / 638 mm	26 1/16" / 662 mm	27 ⅜" / 695 mm	18 ⅞" / 479 mm	28 ½" / 724 mm
14 15/16" / 379 mm	24" / 610 mm	14" / 356 mm	14" / 356 mm	14" / 356 mm	15 ⅛" / 384 mm	15 15/16" / 405 mm	14 15/16" / 379 mm	15 ⅛" / 384 mm	20 ⅞" / 530 mm
Field Reversible	Field Reversible	Field Reversible	Field Reversible	Field Reversible	Field Reversible	Field Reversible	Field Reversible	Field Reversible	Field Reversible
225 kWh	240 kWh	na	na	na	na	na	na	na	na
ENERGY STAR	ENERGY STAR	na	na	na	na	na	na	na	na
S	S	B	W	S	S	S	S	S, B, W	B, W
na	na	23 lbs	23 lbs	23 lbs	23 lbs	23 lbs	25 lbs	23 lbs	25 lbs
na	na	12 lbs	12 lbs	12 lbs	12 lbs	12 lbs	25 lbs	12 lbs	13 lbs
Standard	Standard	No	No	No	No	No	No	No	No
Yes	Yes	No	No	No	No	No	No	No	No
34°F - 45°F	34°F - 45°F	na	na	na	na	na	na	na	34°F - 45°F
Residential / Commercial**	Residential / Commercial**	Yes	Yes	Yes	Yes	Yes	Yes	Yes	Residential

*Models with a lock option must be ordered hinge specific.
**Deemed suitable for outdoor use by UL.
UL Listing only applies to 115 v models.

U-LINE
CORPORATE HEADQUARTERS

CUSTOMER CARE

With over 125 combined years of U-Line product experience, our Customer Care group is equipped with the knowledge and skills to find a solution for you, and fast. Our sophisticated facility is equipped to handle any service request. With live products readily available for diagnostics, our Customer Care group can walk you through a solution while doing it themselves on the same model. Our efficient call center management system ensures minimal wait time for consumers. We believe product support should be quick, simple, and frustration-free.

CUSTOMER CARE & PARTS ASSISTANCE

Monday - Friday 8:00 am to 5:30 pm CST
T: +1.800.779.2547
F: +1.414.354.5696
Customer Care Email: onlineservice@u-line.com
Parts Email: onlineparts@u-line.com

SERIAL NUMBER FORMAT

15 14862 - 05 - 0527

15	14862	05	0527
Year	Factory use only	Month	Factory use only

U-LINE GENERAL INQUIRIES

Monday - Friday 8:00 am to 4:30 pm CST
8900 North 55th Street
Milwaukee, Wisconsin 53223 USA
T: +1.414.354.0300
F: +1.414.354.7905
Email: sales@u-line.com
u-line.com

WARRANTY INFORMATION

FULL ONE YEAR WARRANTY

(TWO YEARS ON MODULAR 3000 SERIES)
From the date of purchase, U-Line covers all parts and labor to repair or replace any product, sold and serviced within the United State and Canada, which proves to be defective in materials or workmanship.

FULL FIVE YEAR WARRANTY

From the date of purchase, U-Line covers all parts and labor to repair or replace any components that prove to be defective in the sealed system (consisting of the compressor, condenser, evaporator, bypass valve, dryer, and connecting tube) for all products sold and serviced within the United States and Canada. Visit u-line.com for complete warranty details.

Designed, engineered and assembled in WI, USA
Copyright © 2014 U-Line Corporation. All Rights Reserved.
P/N ZLITNAPG Sep. 2014

blog

U-LINE®

RIGHT PRODUCT. RIGHT PLACE. RIGHT TEMPERATURE. SINCE 1962.

Wine Captain® Models • Beverage Centers • Clear Ice Machines • Crescent Ice Makers • Refrigerators • Freezers • Combo® Models

8900 North 55th Street • Milwaukee, Wisconsin 53223 USA • Phone +1.414.354.0300 • Fax +1.414.354.7905 • u-line.com