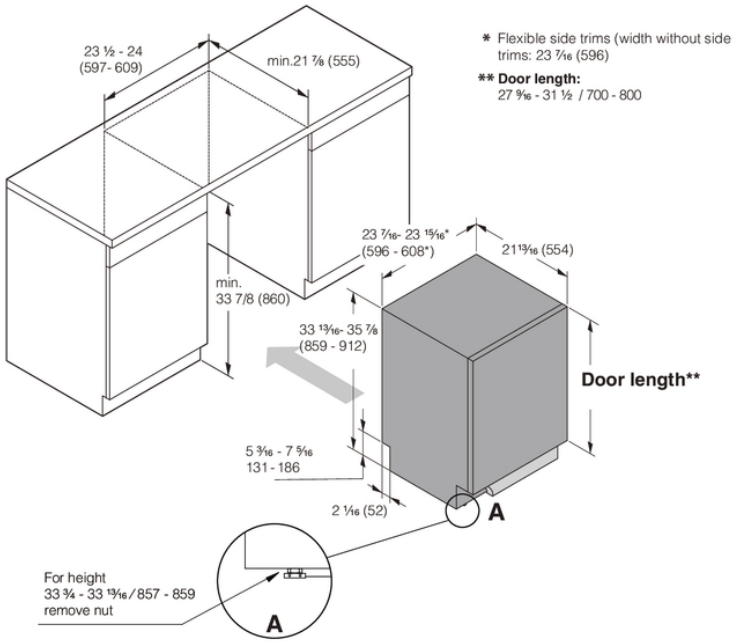


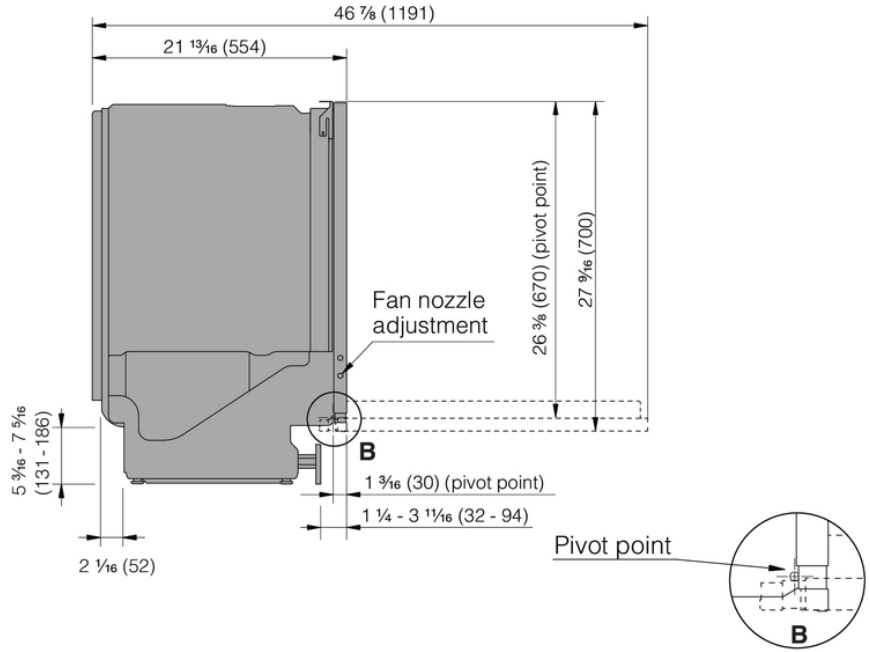


## Door trajectories

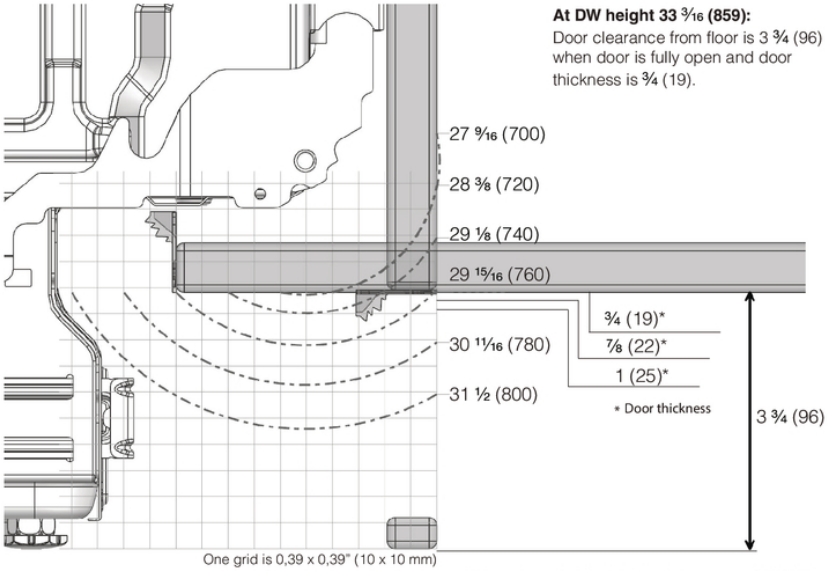


**At DW height 33 3/16 (859):**
Door clearance from floor is 3 ¾ (96) when door is fully open and door thickness is ¾ (19).
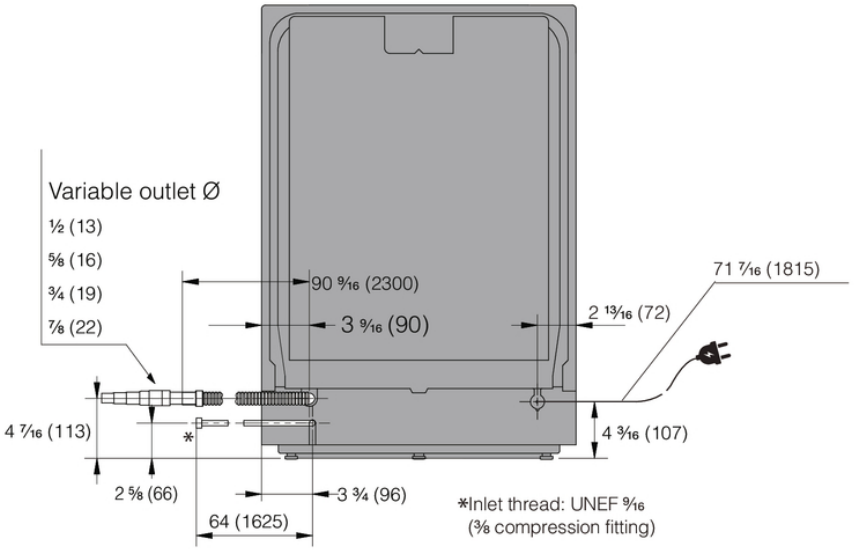
- When air nozzle is installed a minimum gap of 3/16" (5 mm) is required below door panel
- Status light add 5/32" (4mm) to lower edge of door panel