ASSEMBLY INSTRUCTION



KC OFFICE CHAIR

OFFICE CHAIR

ASSEMBLY INSTRUCTION

▽ ASSEMBLY PROGRAM

STEP 1

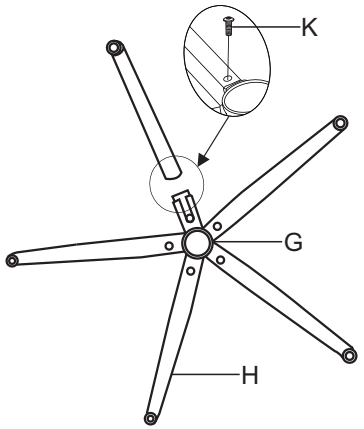

STEP 2

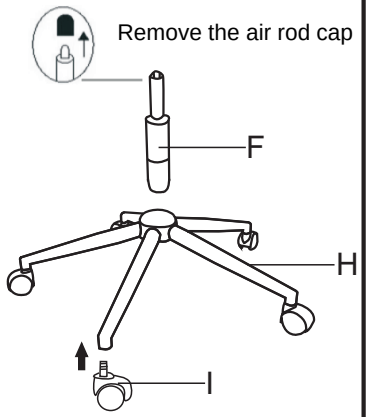

STEP 3

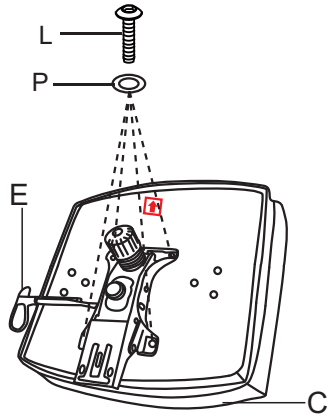

STEP 4

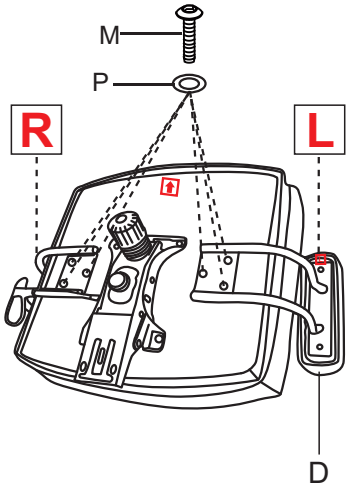

STEP 5

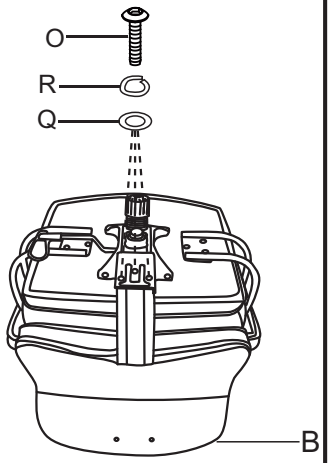

STEP 6

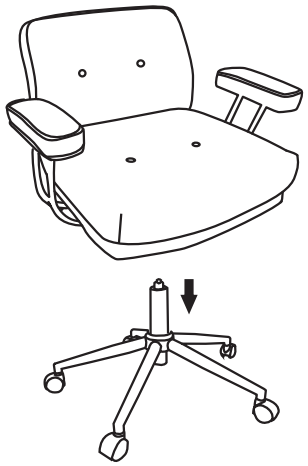

STEP 7

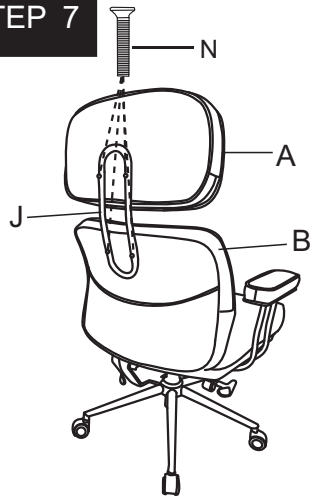

Detailed installation steps can be found on page 2.

FINISH



▽ PARTS x QTY

A=Backrest x1 	K=Screw(M6X14mm) x5 
B=Pillow x1 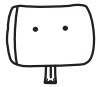	L=Screw(M6X20mm) x4 
C=Cushion x1 	M=Screw(M6X30mm) x6 
D=Armrest x2 	N=Screw(M6X35mm) x4 
E=Mechanism x1 	O=Screw(M8X25mm) x3 
F=Gaslift x1 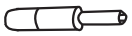	P=Spacer(M6X18mm) x10 
G=Base x1 	Q=Spacer(M8X17mm) x3 
H=Legs x5 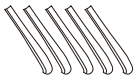	R=Spacer(M8X13mm) x3 
I=Castor x5 	S=Spanner x1 
J=Decorative sheets x1 	T=Mold strip x1 

STEP 1

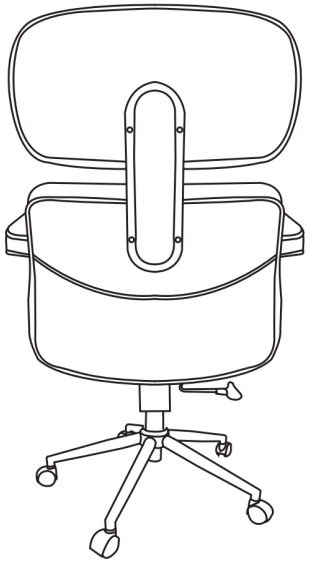



Secure and install the headrest screws.
Tighten the screws to about 80%.

STEP 2

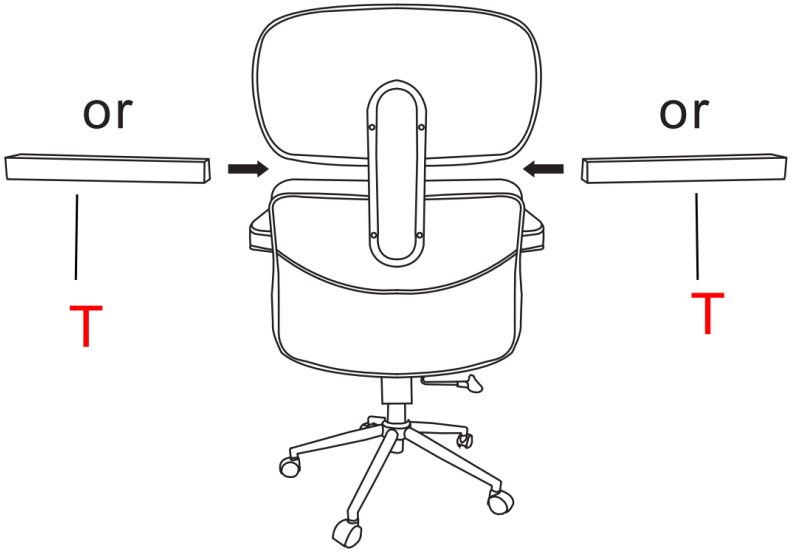

Use Part T (foam padding) during assembly to hold the headrest in place and reduce misalignment.

STEP 3

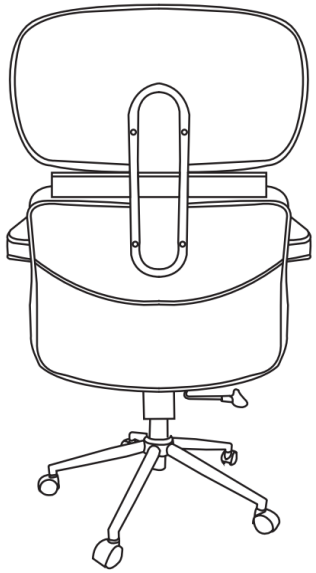



After completing the first two steps, fully tighten all screws.

STEP 4

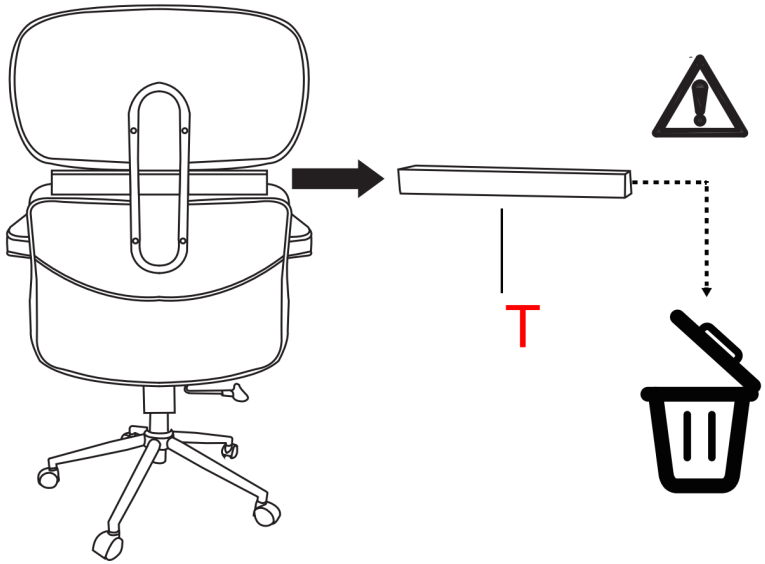

Once assembly is complete, Part T can be discarded.

Contral the lifting of the chair

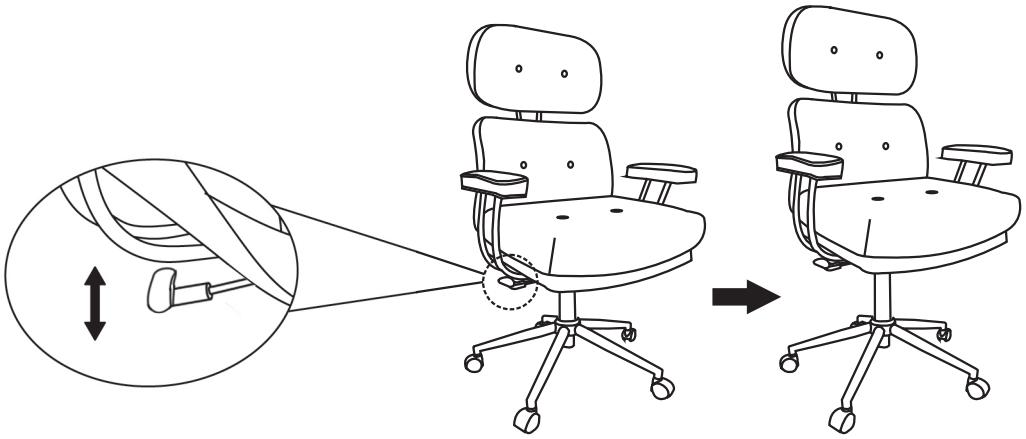

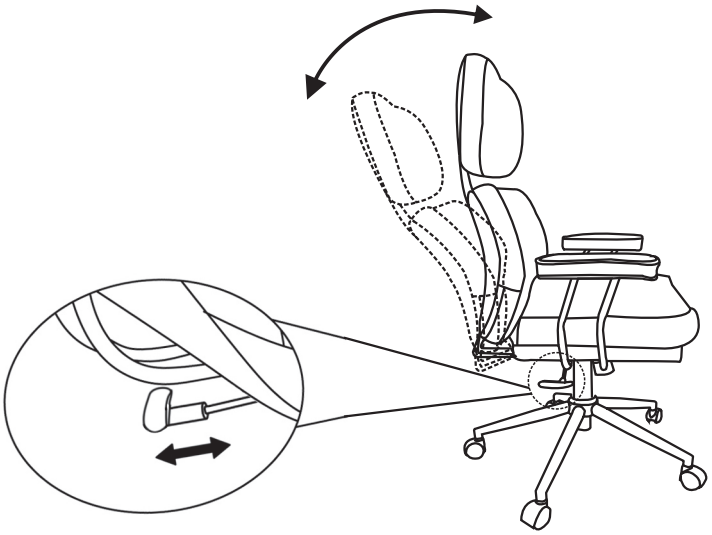

Control the backrest tilt function. Pull out to unlock, push in to lock.

Spin this button clockwise or anticlockwise, to increase or decrease the strength needed to push the backrest backwards

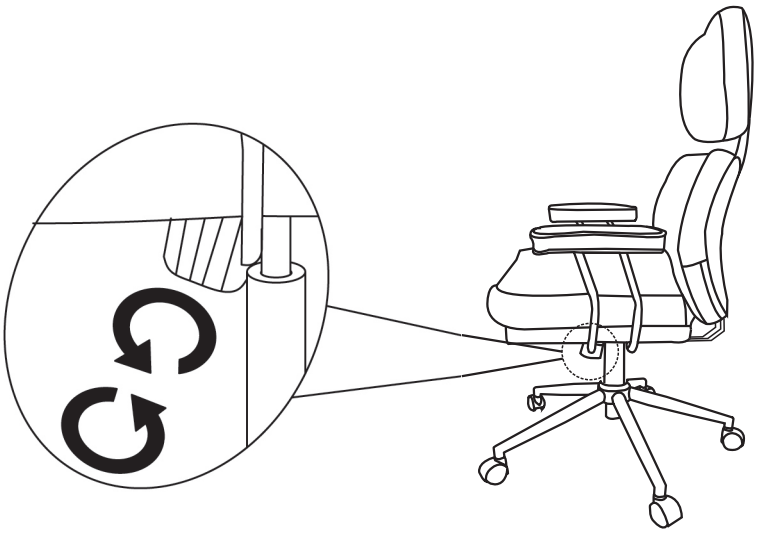

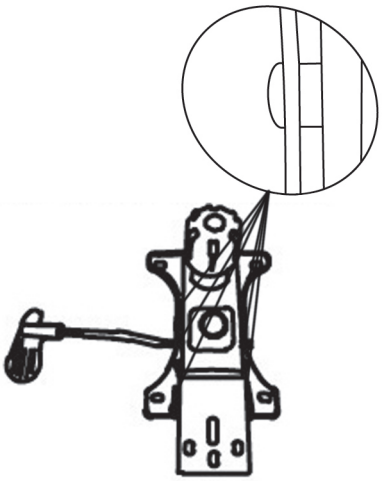

After used for few months, please add lubricating oil(or other kind oil could lubricate the mechanism) at some places, as marked in left side photo, to ensure that the mechanism can be used more smoothly and extand the service life