Assembly Instruction

Advice:
1. Power tools are suggested to be used during installation.
2. More than one person may be required to assemble this product.
3. The best advice is not tightening up any screws until the whole piece is assembled. If having difficulty aligning holes, loosen the screws already installed and readjust the armrest.
4. To avoid mess-up or mismatch, please use the hardware of each box to install the furniture in the same box.

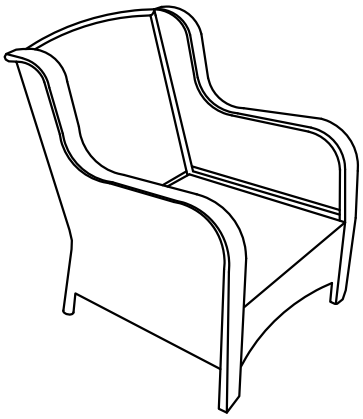

Single Chair

Assembly Video

Parts List

Part Number	Picture	Description	QTY
C-A	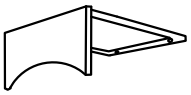	Chair Seat	1
C-B	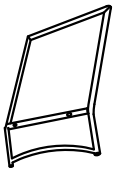	Chair Back	1
C-C	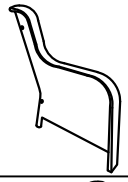	Right Arm	1
C-D	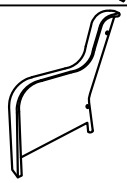	Left Arm	1
C-E	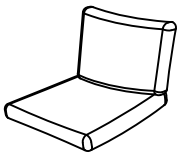	Seat and Back Cushion	1

Part Number	Picture	Description	QTY
N	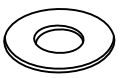	Washer (M6)	10
V	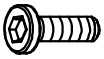	Screw (M6*35)	6
T	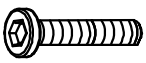	Screw (M6*45)	4
L		Allen Key	1

STEP 1

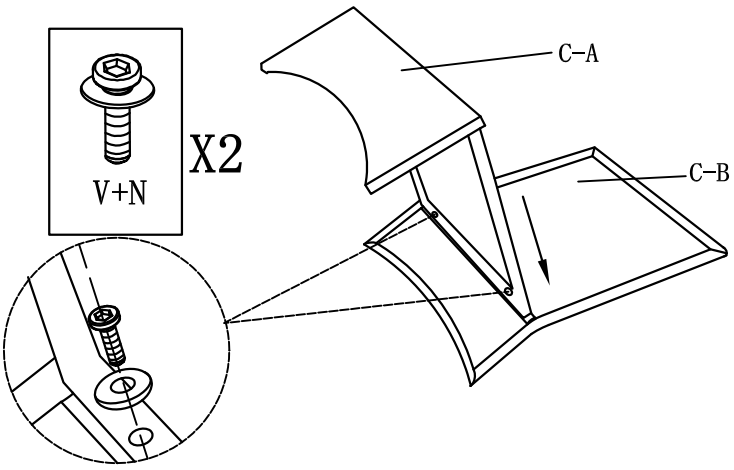

STEP 2

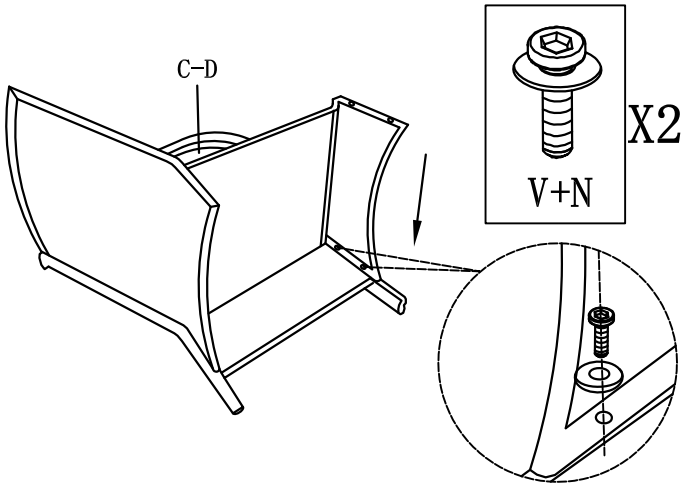

The best advice is not tightening up any screws until the whole piece is assembled.

STEP 3

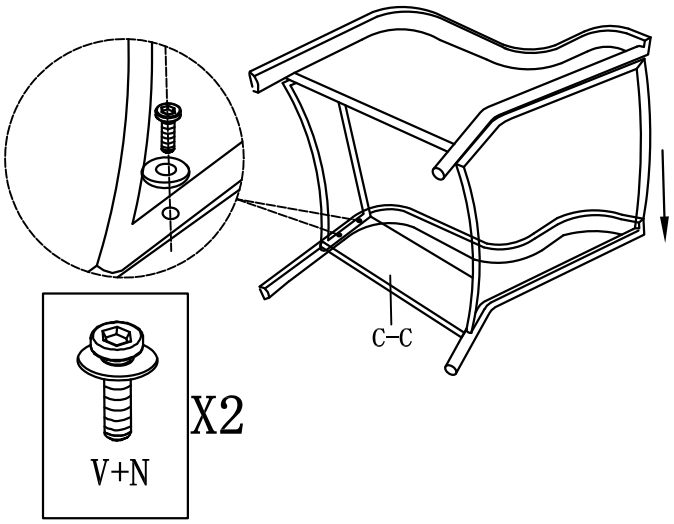

STEP 4

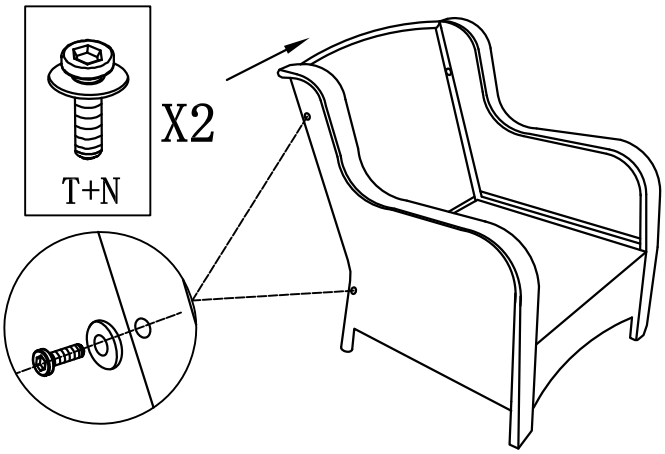

STEP 5

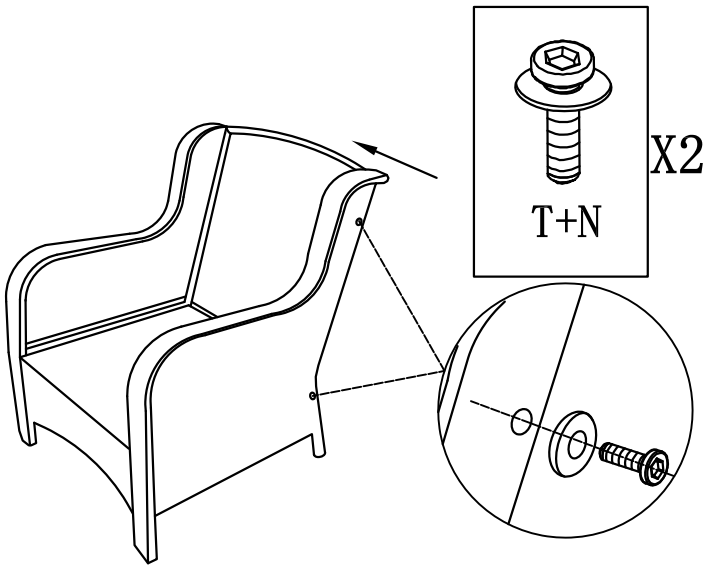

FINISH

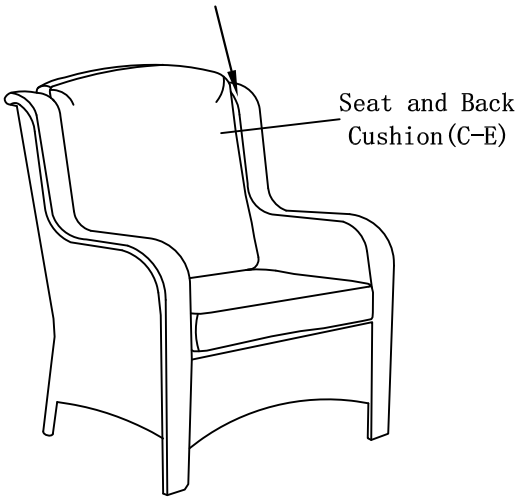

Please tap the cushions and wait 48 to 72 hours to fully rebound