ASSEMBLY INSTRUCTION

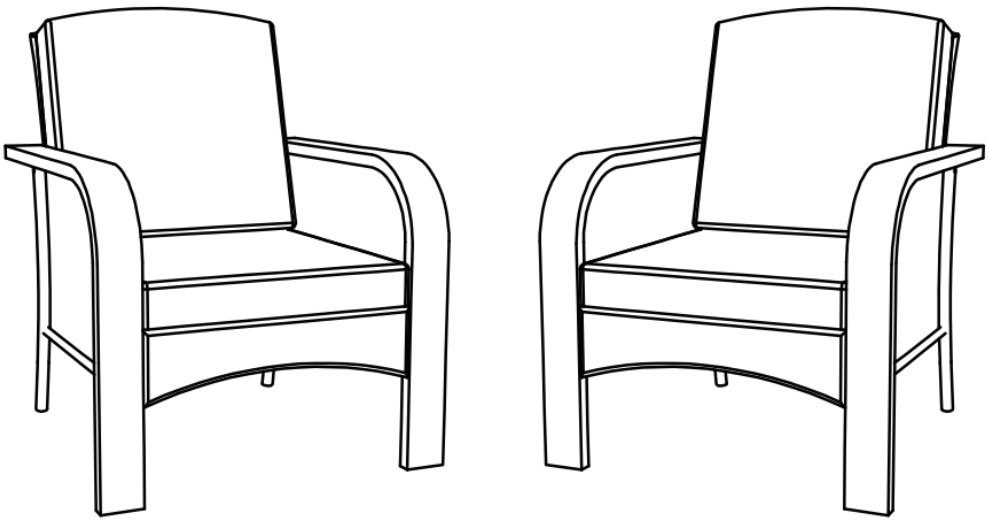

Patio Seating Set 2PCS

Cushion Recovery Notice

For convenient packaging, the seat cushions, back cushions, and ottoman pads have been vacuum-compressed. After unpacking, please allow 5 to 7 days for them to fully expand and regain their original shape. Gently patting or fluffing the cushions can help speed up the recovery process. which typically takes between 72 hours and one week.





Back Cushion





Seat Cushion





Ottoman Cushion

Assembly Instruction

Advice:
1.Power tools are suggested to be used during installation.
2.More than one person may be required to assemble this product.
3.The best advice is not tightening up any screws until the whole piece is assembled.If having difficulty aligning holes,loosen the screws already installed and readjust the armrest.
4.To avoid mess-up or mismatch,please use the hardware of each box to install the furniture in the same box.

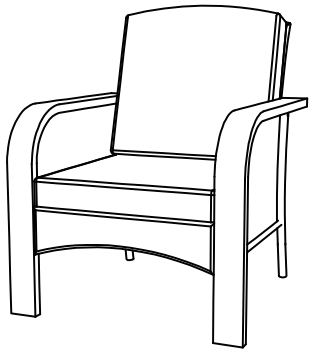

Single Chair X 2

Assembly Video

Parts List

NO.	Picture	Description	QTY
C-A	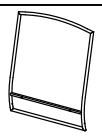	Chair Back	2
C-B		Chair Seat	2
C-C	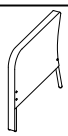	Right Arm	2
C-D	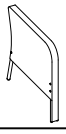	Left Arm	2
C-E	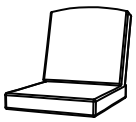	Seat and Back Cushion	2

NO.	Picture	Description	QTY
N		Washer (M6)	20
V		Screw (M6*35)	16
T		Screw (M6*45)	4
L		Allen Key	1

STEP 1

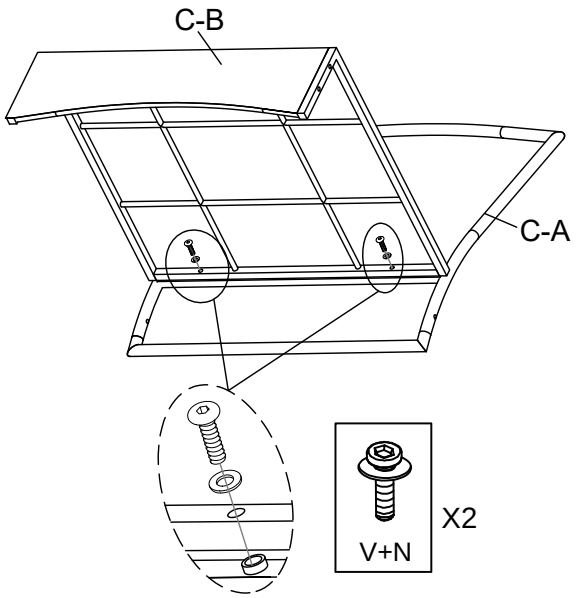

STEP 2

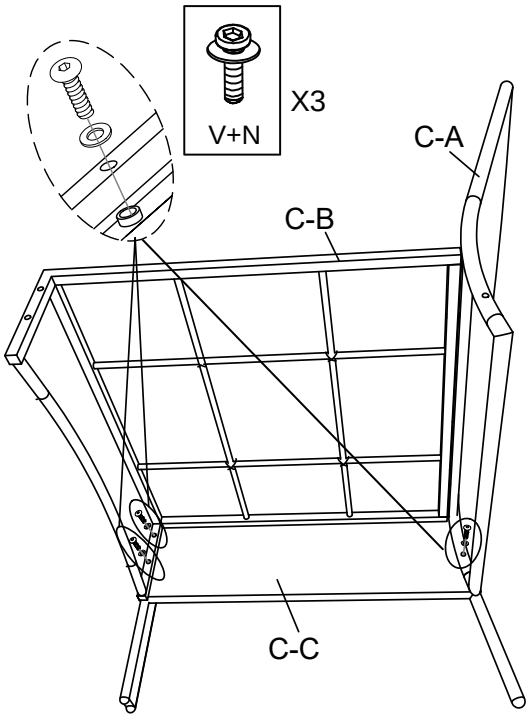

The best advice is not tightening up any screws until the whole piece is assembled.

STEP 3

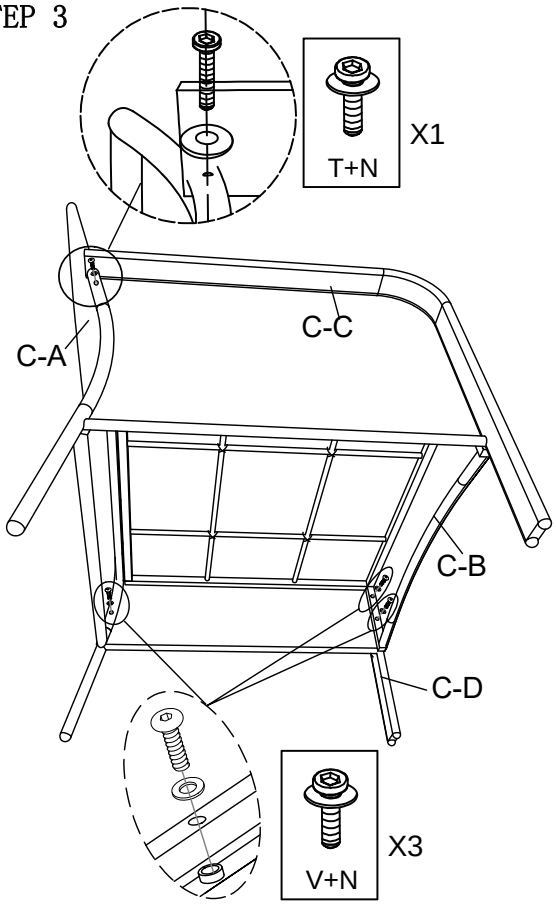

FINISH

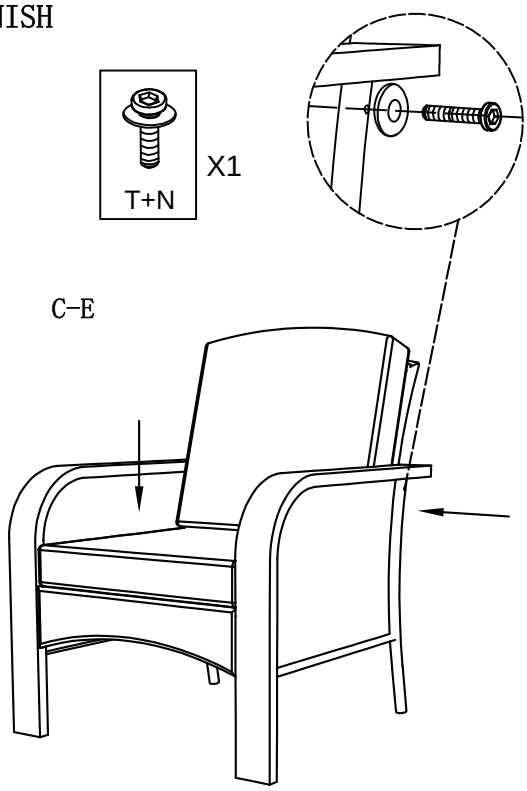

Please tap the cushions and wait 48 to 72 hours to fully rebound