WF45A6400AW | WF45A6400AV

Samsung 4.5 cu. ft. Large Capacity Smart Dial Front Load Washer with Super Speed Wash

SAMSUNG

Available Colors

White
WF45A6400AW

Brushed Black
WF45A6400AV

Features

- AI Powered Smart Dial
- Super Speed Wash
- Wi-Fi Connectivity[1]
- MultiControl™
- CleanGuard™[2]
- Large 4.5 cu. ft. Capacity
- Steam
- ENERGY STAR® Most Efficient
- Vibration Reduction Technology+
- Swirl+ Drum Interior
- Self Clean+
- ADA Compliant[3]
- Direct Drive Motor
- 1200 RPM Maximum Spin Speed
- Internal Water Heater
- 24 Total Washing Cycles
- 13 Additional Options

Convenience

- Child Lock
- Dispenser Trays: Main Wash, Softener, Bleach

Ratings

Most Efficient 2021 ENERGY STAR www.energystar.gov

CEE Tier 3
IMEF = 3.1
IWF = 2.9
93 kWh/yr

Electrical Requirements

120 V / 60 Hz
15 Amps

Specifications

24 Total Washing Cycles:
Normal, Heavy Duty, Bedding, Permanent Press, Delicates, Activewear, Wool, Towels, Eco Cold, Rinse + Spin, Self Clean+, Small Load, Colors, Power Rinse, Spin Only, Outdoor, Denim, Super Speed, Steam Sanitize, Steam Allergen, Steam Normal, Power Steam, Steam Whites, Steam Bulky

13 Additional Washing Options:
Presoak, Extra Rinse, My Cycles, Delay End, Smart Control, Super Speed, Child Lock, AI Pattern, Alarm, Calibration, Wi-Fi, Language, Factory Reset

5 Temperature Settings:
Extra Hot, Hot, Warm, Cold, Tap Cold

5 Spin Settings:
Extra High, High, Medium, Low, Extra Low

5 Soil Settings:
Extra Heavy, Heavy, Normal, Light, Extra Light

Warranty
One (1) Year Parts and Labor
Three (3) Years Stainless Steel Drum (Part Only)
Ten (10) Years DD Motor (Part Only)

Product Dimensions & Weight (WxHxD)
Dimensions: 27" x $38^{3}/_{4}$" x $31^{3}/_{8}$"
Weight: 200.6 lbs

Shipping Dimensions & Weight (WxHxD)
Dimensions: $29^{3}/_{8}$" x $42^{3}/_{8}$" x $34^{1}/_{8}$"
Weight: 205 lbs

Washer	Model #	UPC Code
White	WF45A6400AW	887276557878
Brushed Black	WF45A6400AV	887276557861
Matching Electric Dryer		
White	DVE45A6400W	887276557717
Brushed Black	DVE45A6400V	887276557700
Matching Gas Dryer		
White	DVG45A6400W	887276557786
Brushed Black	DVG45A6400V	887276557779

Optional Accessories	Model #	UPC Code
White Pedestal	WE402NW	887276310152
Brushed Black Pedestal	WE402NV	887276310145
White Riser	WE272NW	887276197647
Brushed Black Riser	WE272NV	887276197630
MultiControl™	DV-MCK	887276528953
Stacking Kit	SKK-8K	887276344034

[1]Requires wireless network, Samsung account and Samsung SmartThings App. The Samsung Smart Things App supports Android OS 4.0 (ICS) or later which is optimized for Samsung smartphones (Galaxy S and Galaxy Note series). This app also supports iOS 7 or later for iPhone models. Samsung SmartThings App available in App Store and Play Store.

[2]Antimicrobial treatment does not protect users or other items against bacteria, viruses, germs, or other disease organisms.

[3]ADA Compliant when using 27" wide riser. (Riser model codes: WE272NV, WE272NW, WE272NC)

WF45A6400AW | WF45A6400AV

Samsung 4.5 cu. ft. Large Capacity Smart Dial Front Load Washer with Super Speed Wash

SAMSUNG

Dimensions

Required dimensions for installation with pedestal:

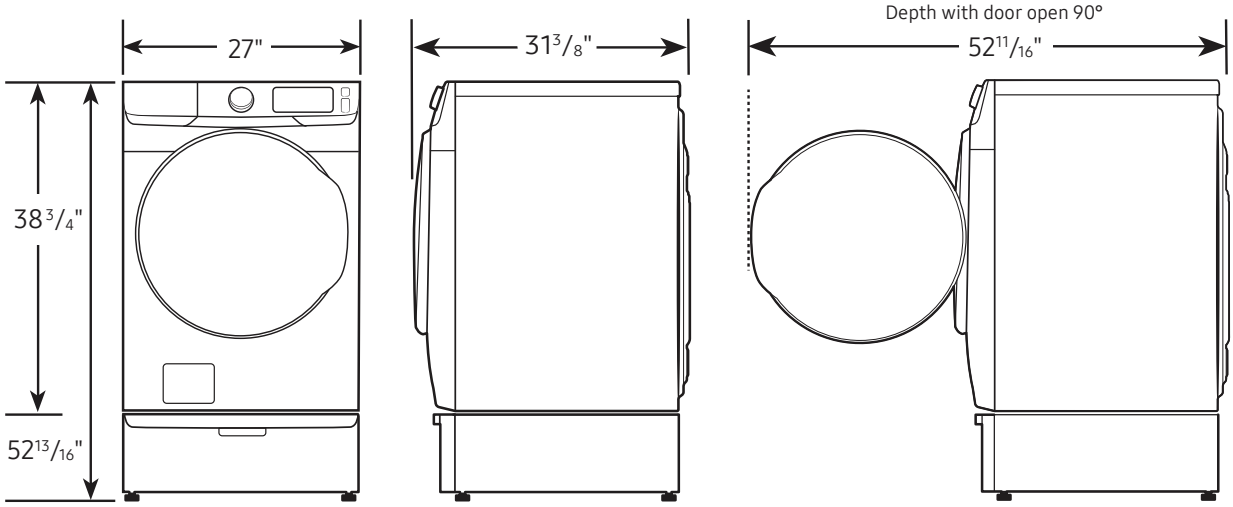

Installation Specifications – Side-by-Side

If the washer and dryer are installed together or the dryer alone, the closet front must have two unobstructed air openings for a combined minimum total area of 72-inch². Your washer alone does not require a specific air opening.

Alcove or closet installation

Minimum clearance for closet and alcove installations:

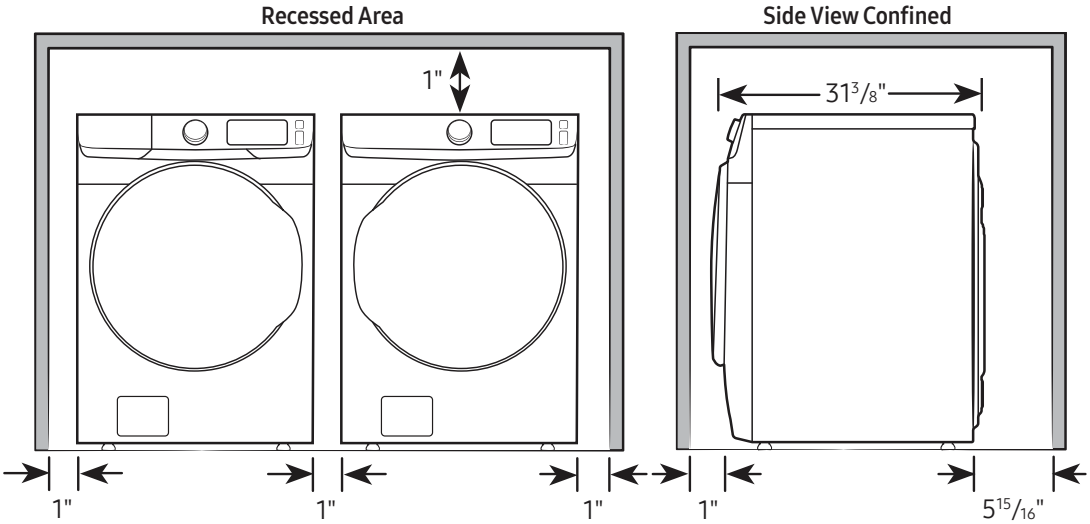

Connection Dimensions

Back view of washer

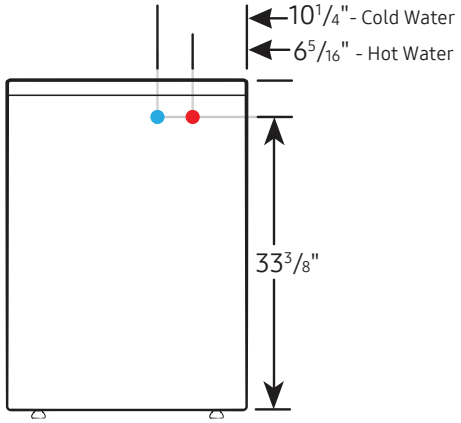

LEGEND:

- Cold Water Connection
- Hot Water Connection

Actual color may vary. Design, specifications, and color availability are subject to change without notice. Non-metric weights and measurements are approximate.

©2021 Samsung Electronics America, Inc., 85 Challenger Road, Ridgefield Park, NJ 07660. Tel: 800-SAMSUNG. samsung.com. Samsung is a registered trademark of Samsung Electronics Co., Ltd.

WF45A6400AW | WF45A6400AV

Samsung 4.5 cu. ft. Large Capacity Smart Dial Front Load Washer with Super Speed Wash

SAMSUNG

Installation Specifications – Stacked Pair

Clearances indicated are for stacked pairs. The closet front must have two unobstructed air openings for a combined minimum total area of 72-inch^2.

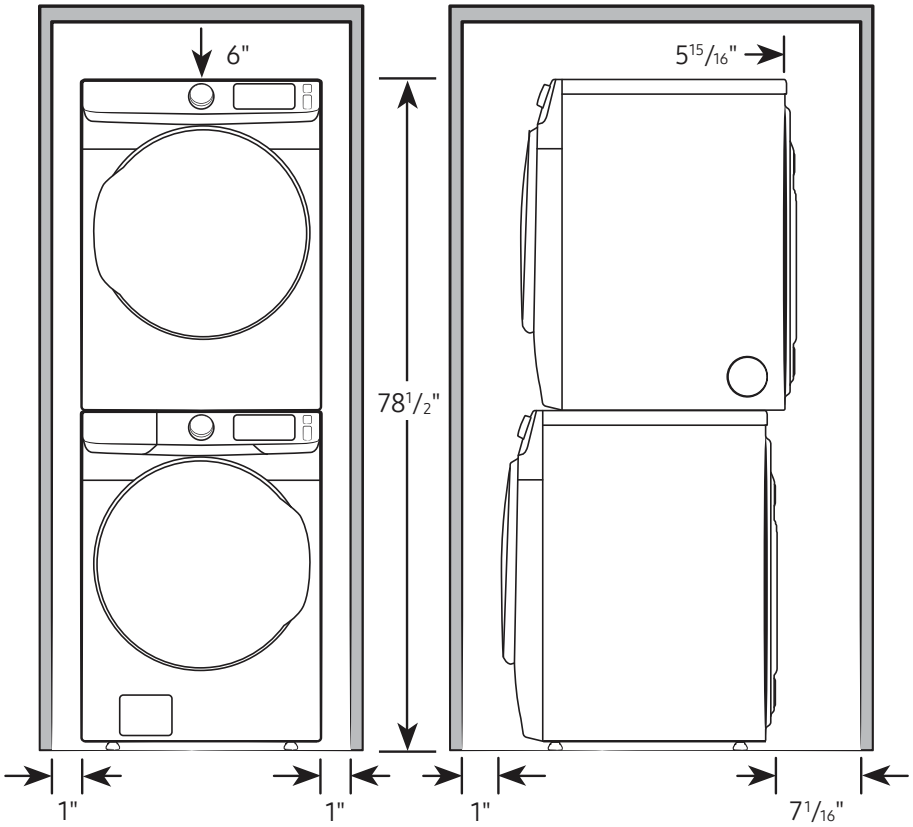

Connection Dimensions

Back and side views of stacked pair

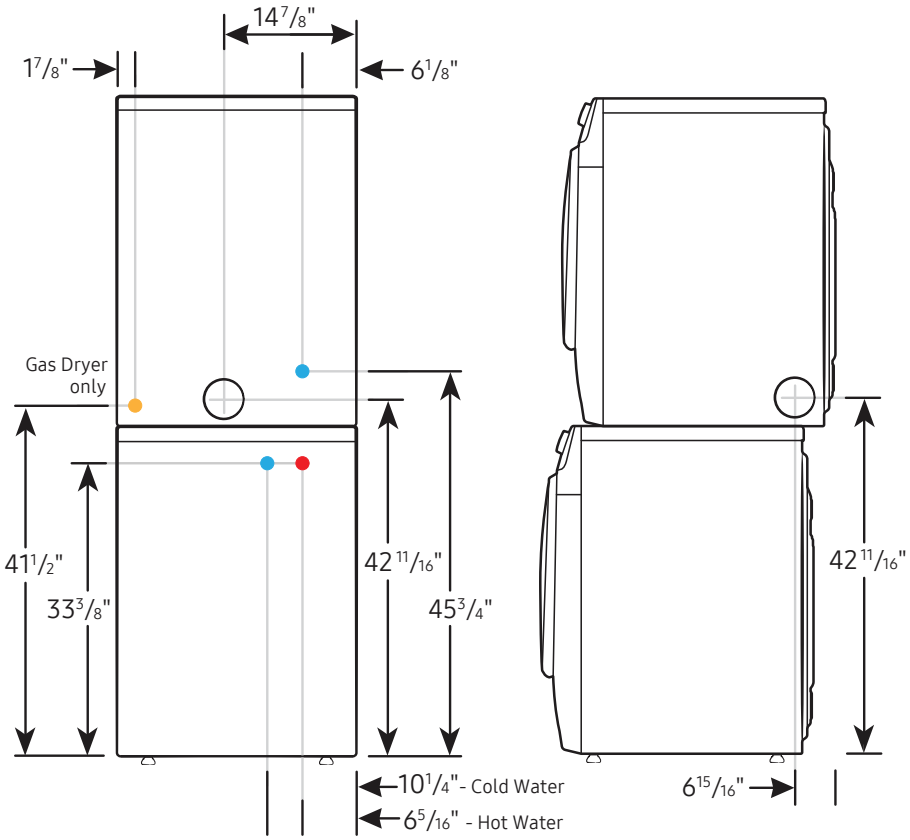

LEGEND:

- Cold Water Connection
- Hot Water Connection
- Gas Connection

Actual color may vary. Design, specifications, and color availability are subject to change without notice. Non-metric weights and measurements are approximate.

©2021 Samsung Electronics America, Inc., 85 Challenger Road, Ridgefield Park, NJ 07660. Tel: 800-SAMSUNG. samsung.com. Samsung is a registered trademark of Samsung Electronics Co., Ltd.