ASSEMBLY INSTRUCTION

MODEL NO: B3650 / B3850 / B3950 / B3750 / B3760-11
MIRROR

(BOX 1)
BOX OF DRESSER

ITEM	DRAWING	DESCRIPTION	Qty
A		Dresser	1

(BOX 2)
BOX OF MIRROR

ITEM	DRAWING	DESCRIPTION	Qty
A		Mirror	1
B		Mirror support	2

(BOX 2)
HARDWARELIST

ITEM	DRAWING	DESCRIPTION	Qty
1		CB Screw (M4*35mm)	**8** pcs
2		SCREW DRIVER (*)	1pcs

The manufacturer does not provide item 2.

* THE HARDWARE IS LOCATED IN THE PACKING ITEM

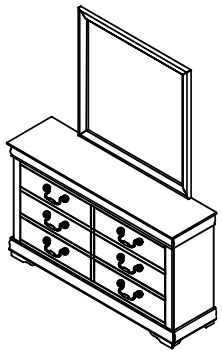

COMPLETED DRESSER & MIRROR ASSEMBLY

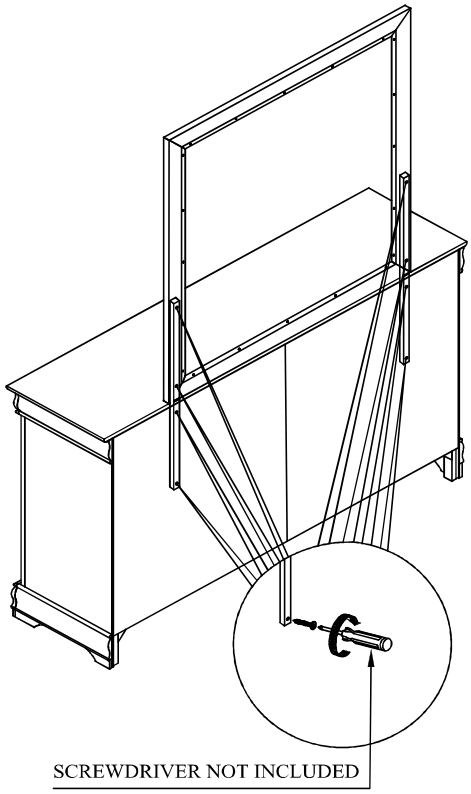

SCREWDRIVER NOT INCLUDED

THE ANTI TIPPING HARDWARE IS LOCATED IN THE RIGHT SIDE FRONT DRAWER OF DRESSER.

NOTE: PERIODICALLY CHECK TO ENSURE THAT ALL CONNECTORS (BOLTS, SCREWS, ETC.) ARE TIGHT.

CLEANING INSTRUCTION

After assembled, clean & polish the completed parts if necessary with soft cloth and industrial recognized furniture polish.

MADE IN VIETNAM