ASSEMBLY INSTRUCTION



SKL OFFICE CHAIR

OFFICE CHAIR

ASSEMBLY INSTRUCTION

ASSEMBLY PROGRAM

STEP 1

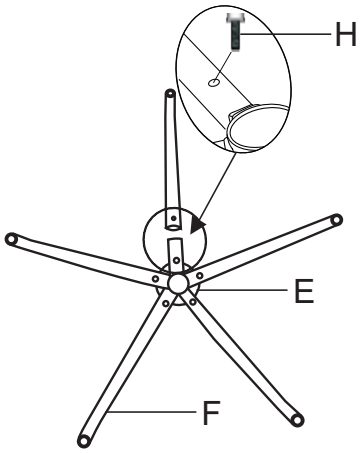

STEP 2

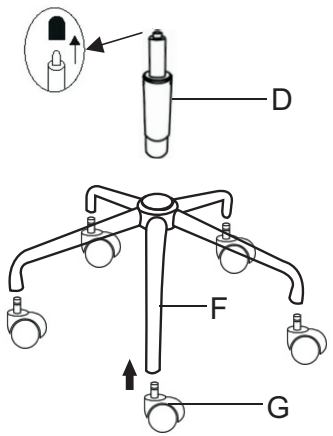

STEP 3

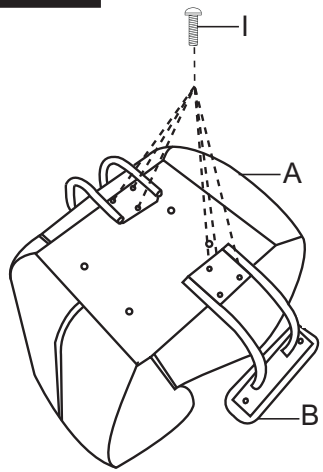

STEP 4

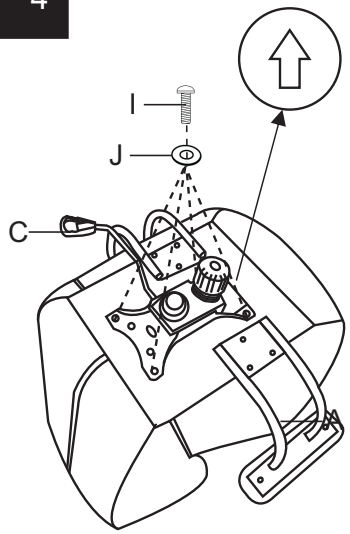

STEP 5

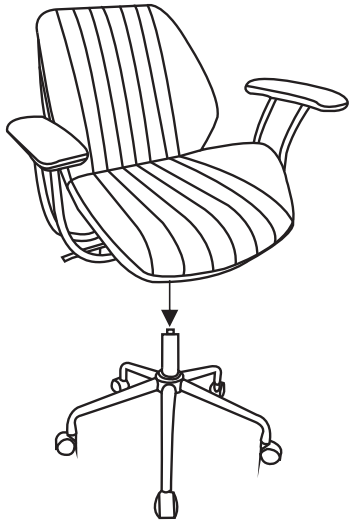

FINISH



PARTS x QTY

A=Backrest x1	G=Castor x5
	
B=Armrest x2	H=Screw(M6X14mm) x5
	
C=Mechanism x1	I=Screw(M6X20mm) x10
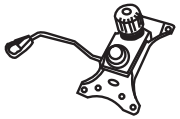	
D=Gaslift x1	J=Spacer(M6X18mm) x4
	
E=Base x1	K=Spanner x1
	
F=Legs x5	
	