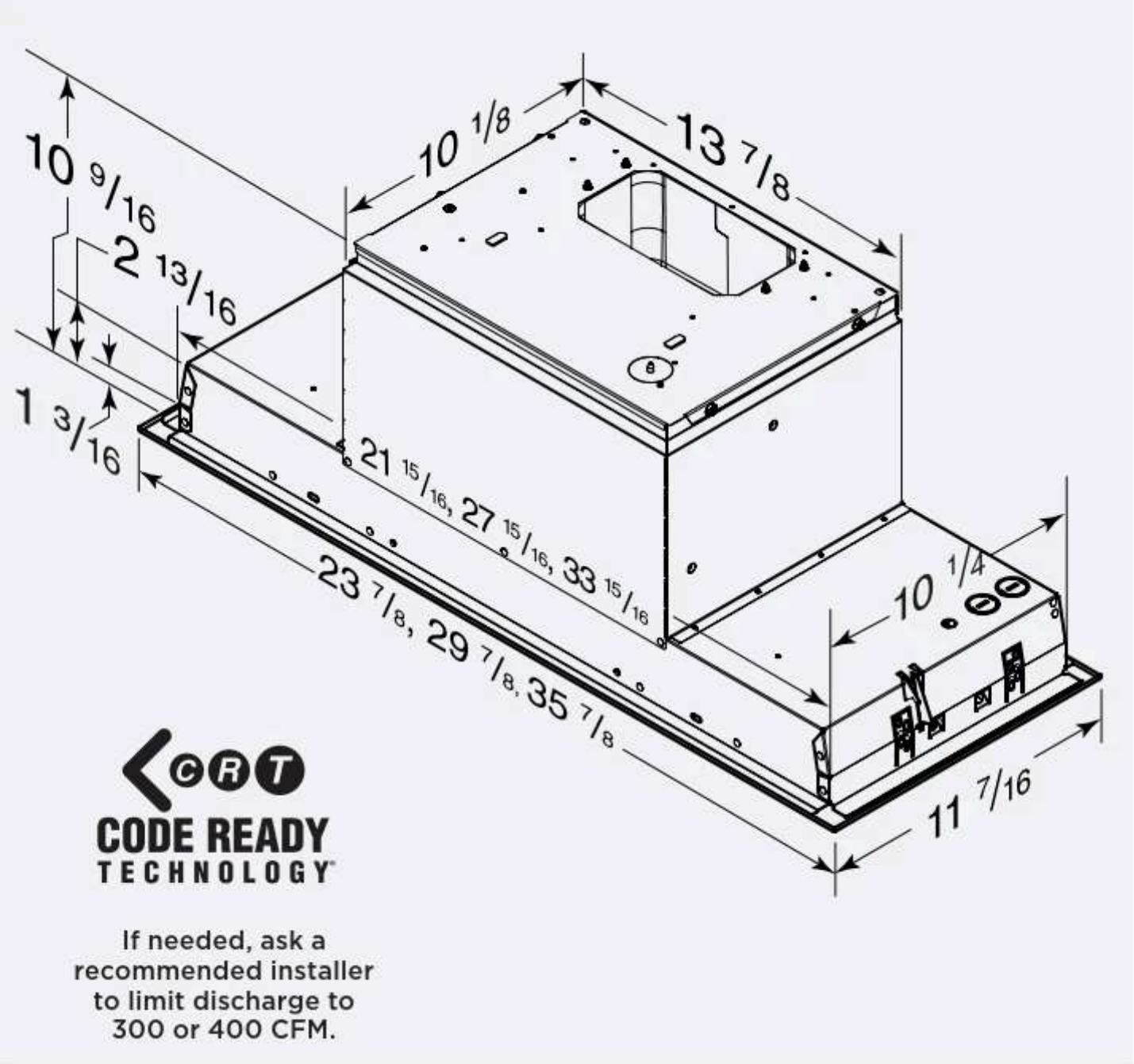
10 9/16
2 13/16
1 3/16
10 1/8
13 7/8
21 15/16, 27 15/16, 33 15/16
23 7/8, 29 7/8, 35 7/8
10 1/4
11 7/16
CRT
CODE READY
TECHNOLOGY
If needed, ask a recommended installer to limit discharge to 300 or 400 CFM.