ASSEMBLY INSTRUCTION

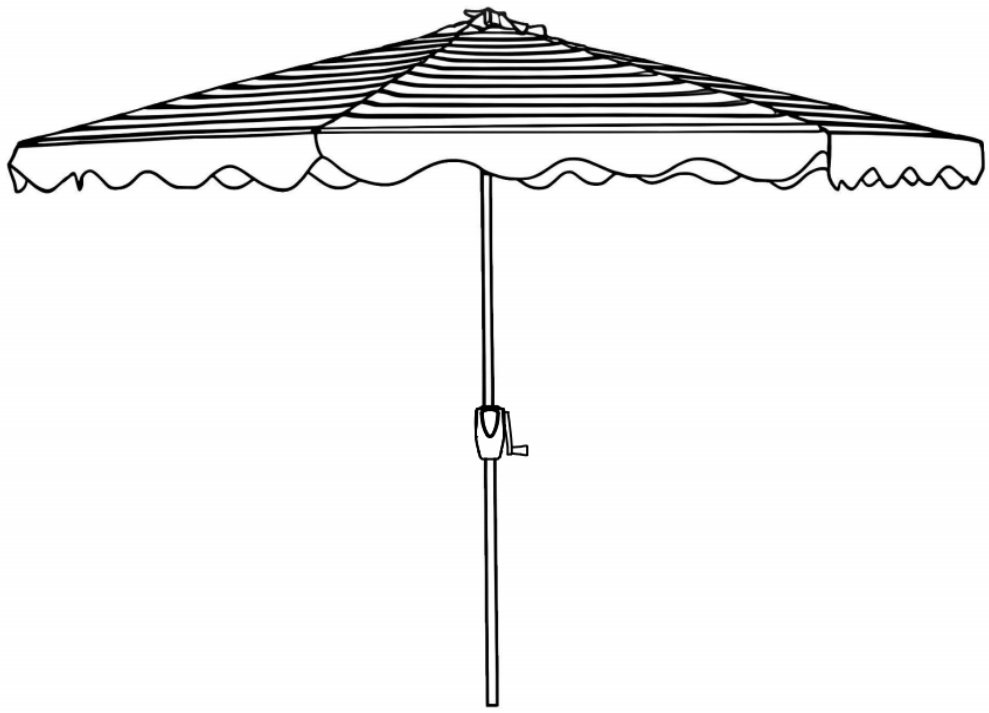

Assembly Instruction

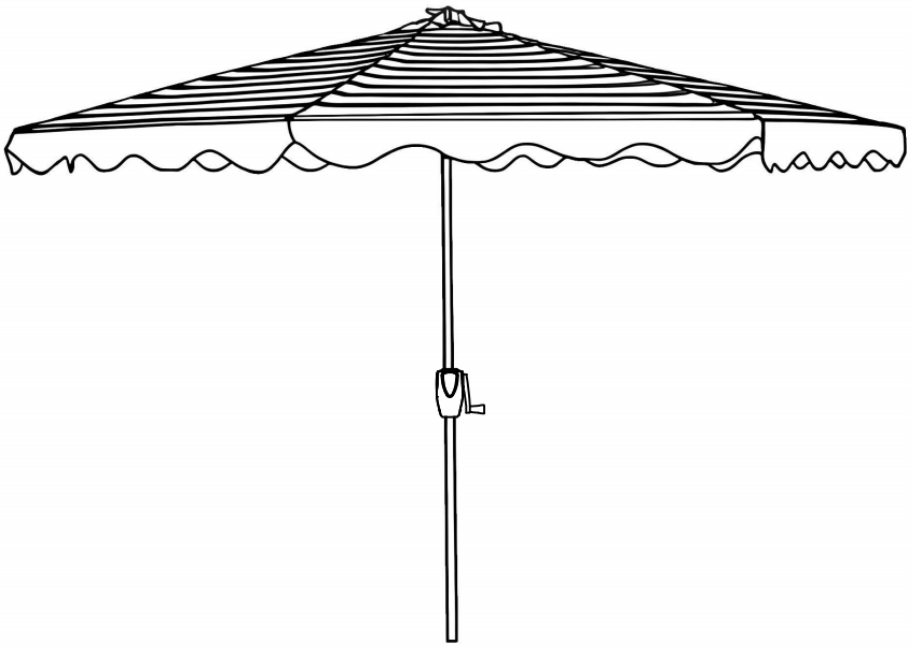

Parts List

NO.	Picture	Description	QTY
A	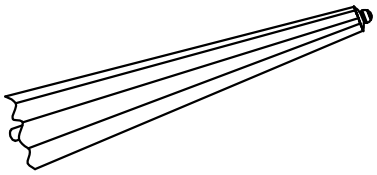	Umbrella Body	1
B	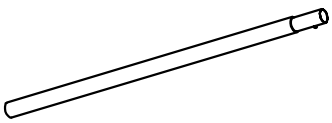	Lower Pole	1

STEP 1

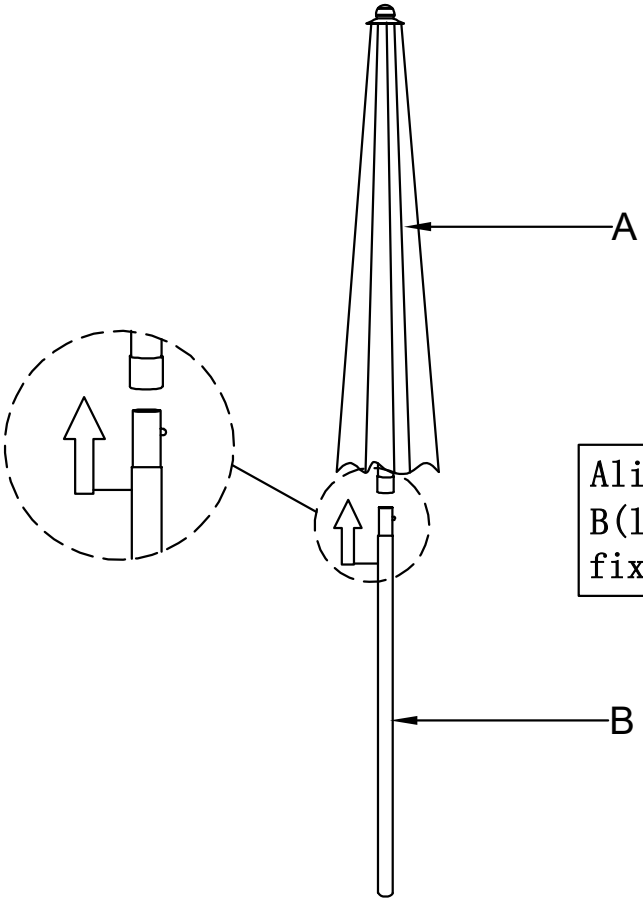

Align A(umbrella body) with B(lower pole) clockwise to fix it inplace.

STEP 2

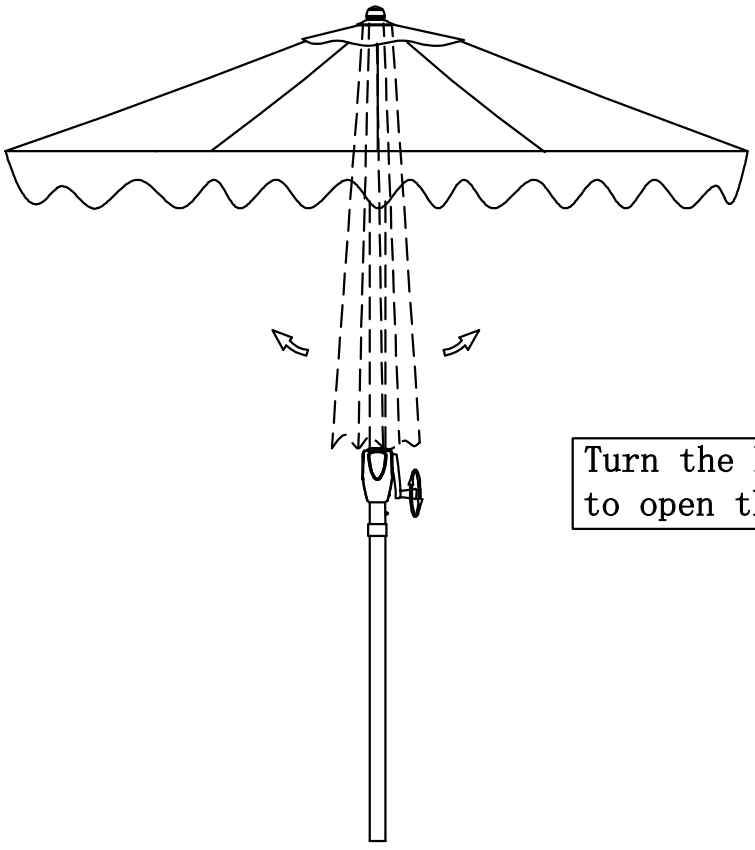

Turn the handle clockwise to open the umbrella.

STEP 3

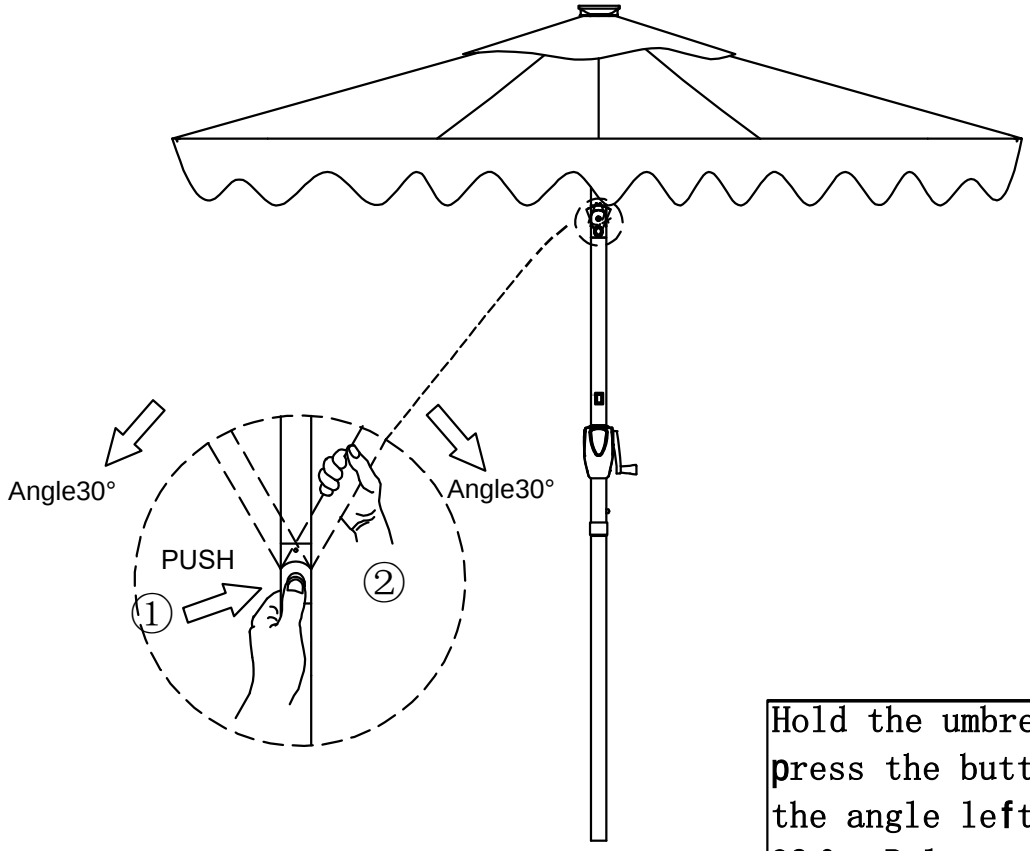

Hold the umbrella body (A), press the button, and adjust the angle left or right up to 30°. Release the button to lock the position.

FINISH

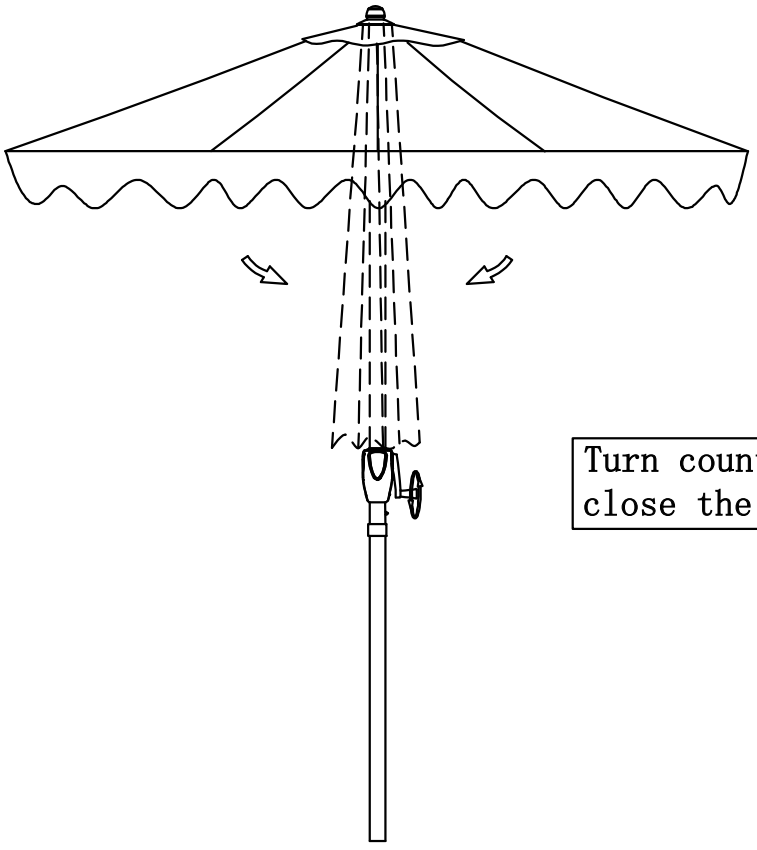

Turn counterclockwise to close the umbrella.