B9332-F-HBFB // B9332-FT-RAIL
Full Headboard / Footboard / Side Rail

Thank you for purchasing this quality product . Be sure to check all packing material carefully for small parts that may have come loose inside the carton during shipment.

Do not fully tighten screws until fully assembled

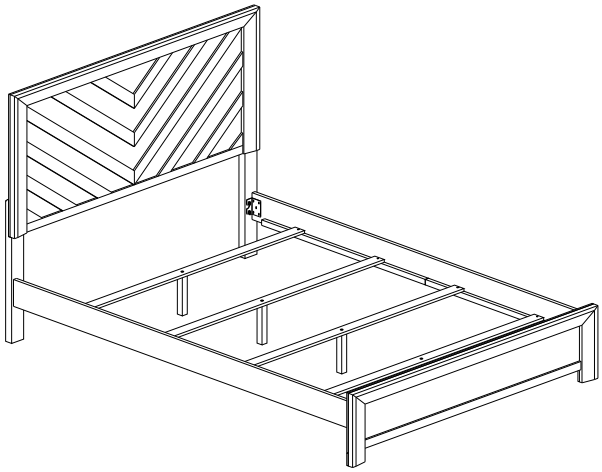

COMPLETE ASSEMBLY

(BOX 1)

Box of Headboard / Footboard - Hardware List		
A	JCBB BOLT M8 x 1.0 x 40 mm	6
B	ALLEN KEY - M5	1
C	JCBB BOLT - M8 x 16 mm	8
D	JCBC BOLT - M6 x 40 mm	4
E	CSK SCREW - M4 x 32 mm	8
F	ALLEN KEY - M4	1

(BOX 1)

Box of Headboard / Footboard		
NO	DESCRIPTION	QTY
1	Headboard	1
2	Headboard Leg - L & R	2
3	Footboard	1
4	Bed Slat	4
5	Slat Support	4

(BOX 2)

Box of Side Rail		
NO	DESCRIPTION	QTY
6	Side Rail	2

STEP 1

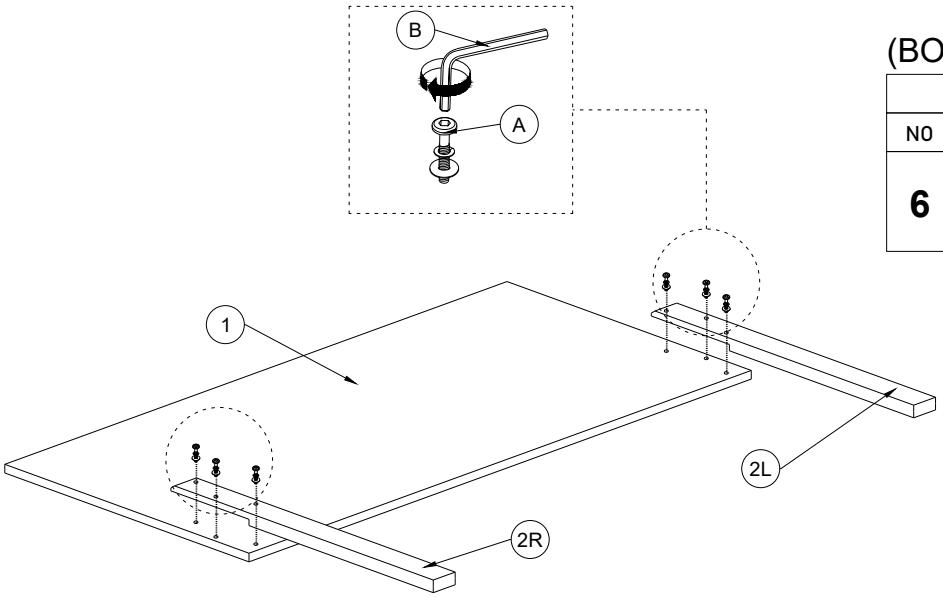

The Hardware is Located in the Packing Items.

PLACE WOOD PARTS ON A CLEAN NON-ABRASSIVE SURFACE

MADE IN MALAYSIA

B9330 / B9335-F-HBFB // B9330 / B9335-FT-RAIL
Full Headboard / Footboard / Side Rail

Thank you for purchasing this quality product . Be sure to check all packing material carefully for small parts that may have come loose inside the carton during shipment.

Do not fully tighten screws until fully assembled

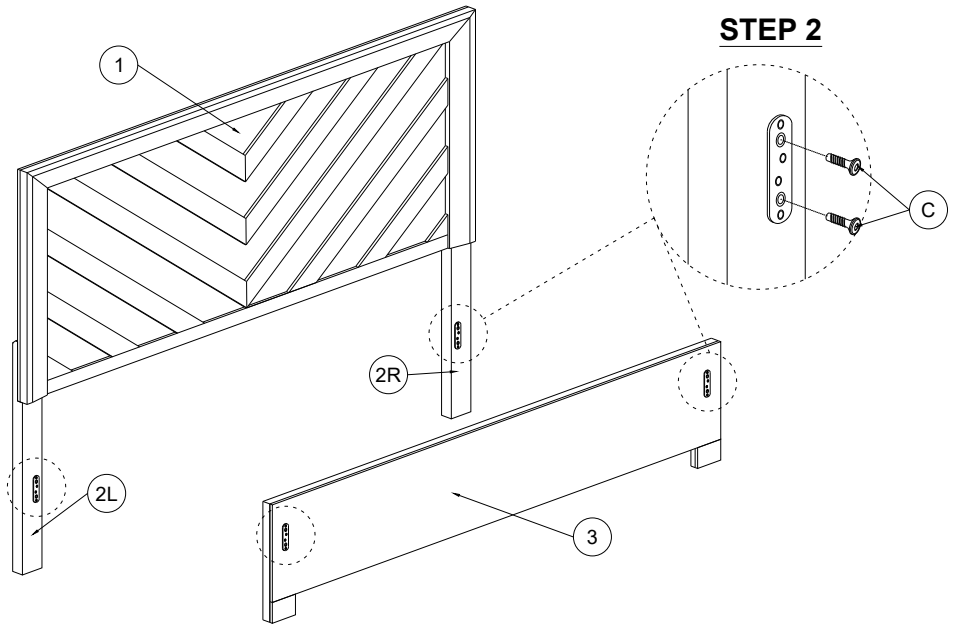

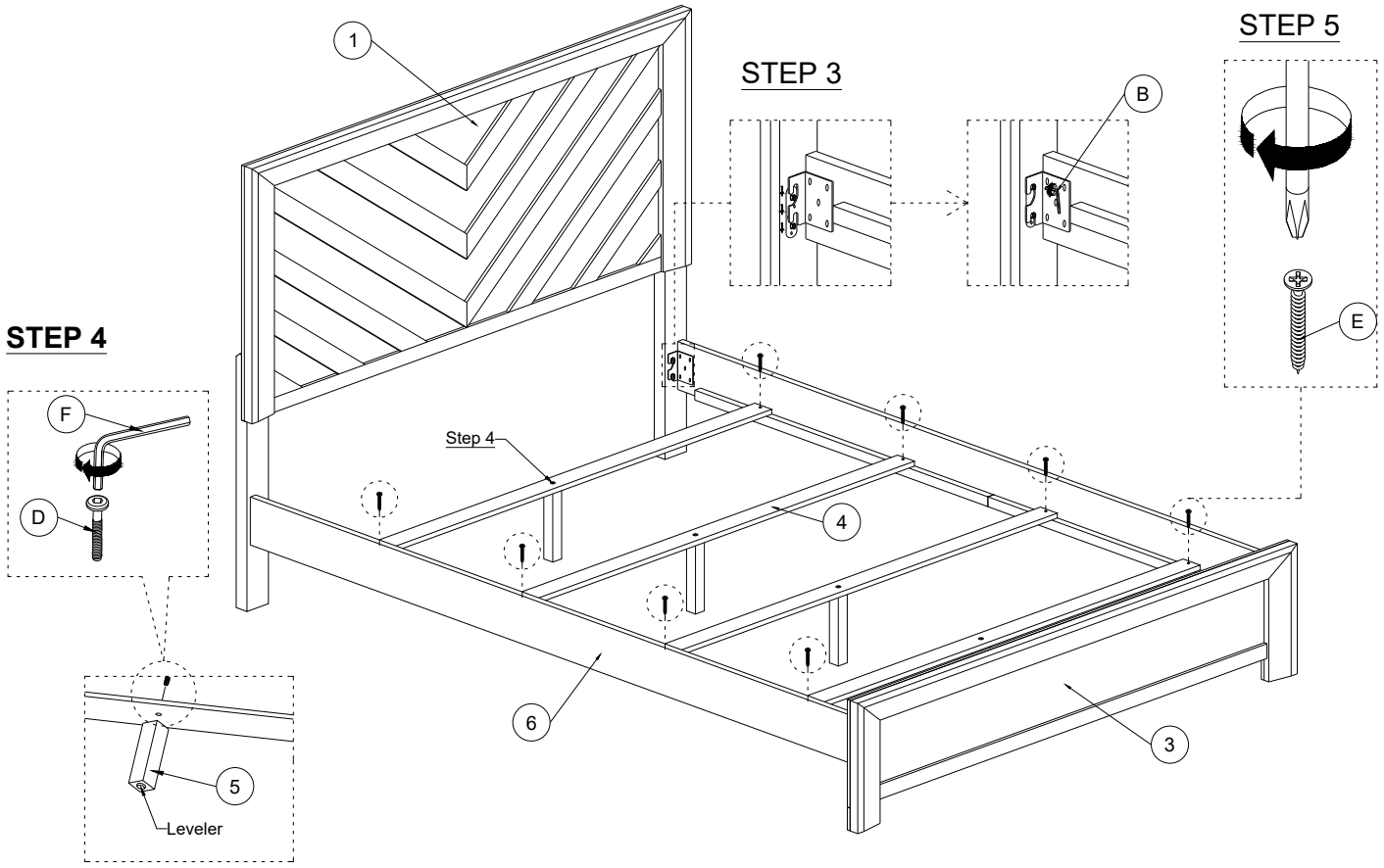

MADE IN MALAYSIA