PODS301W
30-INCH STEAM AND CONVECTION SINGLE BUILT-IN OVEN
PROFESSIONAL SERIES

FEATURES & BENEFITS

★ - Large Steam and Convection cavity at 2.8 cu. ft.
- Designed for flexibility – standard or flush installation into kitchen cabinets
- Steam and Convection Cooking provides unrivaled taste and quality – food stays moist on the inside and is perfect on the outside
- Steam and Convection Oven offers passionate cooks more cooking solutions – Broil, Steam, True Convection, Steam and Convection
- Specially crafted gray glass on stainless steel for a luxurious look and finish

★ THERMADOR® EXCLUSIVE

GENERAL PROPERTIES

Heating Modes

(17) Bake, Broil, Roast, Convection Bake, Convection Broil, Convection Roast, Proof, Warm, Pizza, True Convection, Dehydrate, Speed Convection, Slow Roast, Steam, Steam Convection, Defrost, Reheat, Steam Programs

Cleaning Type	Easy Clean / Ecolytic Clean
Telescopic Rack(s)	3
Illumination Type	LED
Interior Lights	3
Home Connect (Wi-Fi Enabled)	Yes

OVEN PERFORMANCE

Convection Element	2,300 W
Bake Element	1,420 W
Broiler Element	3,050 W

TECHNICAL DETAILS

Watts	4,100 W
Circuit Breaker	20 A
Volts	240 / 208 V
Frequency	60 Hz
Plug Type	Fixed Connection, No Plug
Conduit	50" 3-Wire
Energy Source	Electric
Installation Type	Non-Plumbed

DIMENSIONS & WEIGHT

Oven Cavity Size	2.8 cu. ft.
Overall Appliance Dimensions (HxWxD)	25 13/16" x 29 3/4" x 23 7/16"
Dimensions with Storage Drawer SDS30WC	29" x 29 3/4" x 24 1/2"
Trim Overlaps (Top – Sides – Bottom)	3/8" to 1 5/16" – 9/16" – 0"
Required Cutout Size (HxWxD) – Standard Installation	24 1/2"- 25 7/16" x 28 1/2" x 23 1/2"
Standard Installation with Storage Drawer SDS30WC	27 5/8" - 28 5/8" x 28 1/2" x 23 1/2"
Required Cutout Size (HxWxD) – Flush Installation	25 15/16" x 30" x 24 1/2"
Flush Installation with Storage Drawer SDS30WC	29 1/8" x 30" x 24 1/2"
Overall Oven Interior Dimensions (HxWxD)	14 1/2" x 18 7/8" x 17 3/8"
Usable Oven Interior Dimensions (HxWxD)	11 1/2" x 15 1/2" x 15 5/8"
Net Weight	173 lbs

ACCESSORIES (INCLUDED)

3 Telescopic Racks, Multi-point Meat Probe, Broil Pan, 1 Large Pan, 1 Small Pan, 1 Large Perforated Pan, 1 Small Perforated Pan

WARRANTY

Limited Warranty Parts and Labor	2 Year

PODS301W
30-INCH STEAM AND CONVECTION SINGLE BUILT-IN OVEN
PROFESSIONAL SERIES

ACCESSORIES (OPTIONAL)

577552
Steam Cooking Pan–Small,
12 13/16" x 6 15/16" x 1 9/16" D

577553
Perforated Steam Cooking Pan–Small,
12 13/16" x 6 15/16" x 1 9/16" D

577551
Perforated Steam Cooking Pan–Extra Large,
17 15/16" x 14 3/4" x 1 3/8" D

12022200
Multi-point Meat Probe

11013689
Broiler Grill,
15 1/4" x 12 7/8"

11024904
Lg (Max Broil) Broiler Grill Set (2),
14 5/16" x 8 9/16"

00777111
Wire Rack for Steam Oven,
17 15/16" x 14 3/4"

623653
Sponge

00484628
Broiler Pan,
16 7/16" x 12 5/8" x 1 1/2" D

11024903
Lg (Max Broil) Broiler Pan,
18 5/16" x 14 3/4" x 1 5/8" D

11014338
Universal Pan–Extra Large,
17 15/16" x 14 3/4" x 1 1/2" D

30-INCH STEAM AND CONVECTION SINGLE OVEN

Steam Oven Wall Mount Installation
Steam Oven Bottom Hinge

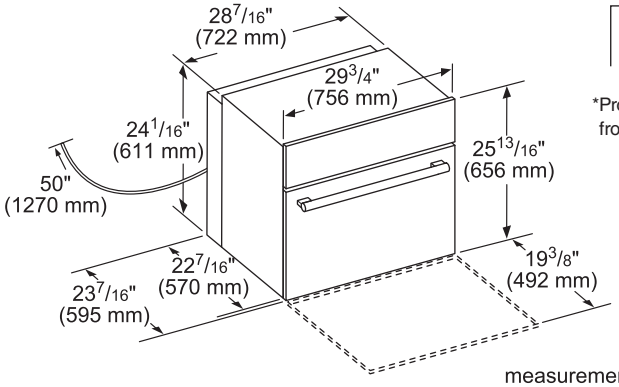

measurements in inches (mm)

Door Handle Depth*

Professional Series Handle

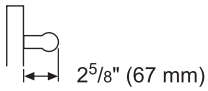

*Protrusion of handle from door skin

Single Steam Oven
Wall mount installation

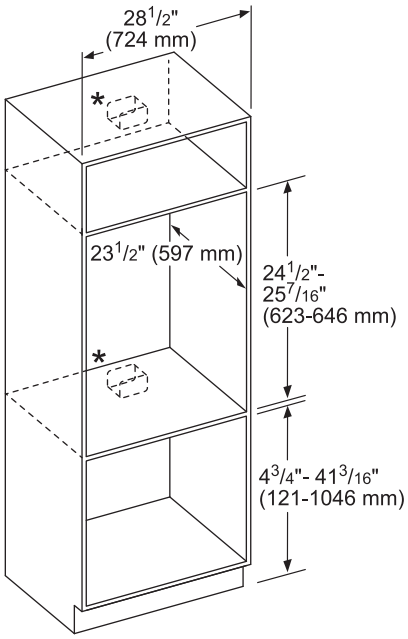

* For single ovens installed into a wall cabinet, the junction box may be located above, beneath left or right of the unit within range of the power cord.

measurements in inches (mm)

Steam Oven Wall Mount Installation
Dimensions for Under-Counter Installation

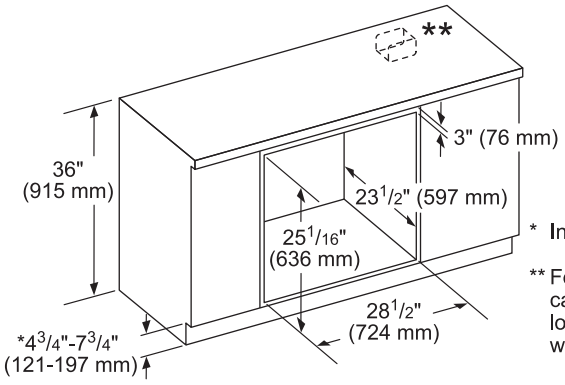

* Includes 3/4" (19 mm) base plate.

** For single ovens installed under a cabinet, the junction box should be located to the right or left of the unit within reach of the power cord.

measurements in inches (mm)

PODS301W
30-INCH STEAM AND CONVECTION SINGLE BUILT-IN OVEN
PROFESSIONAL SERIES

30-INCH STEAM AND CONVECTION SINGLE OVEN

Flush installation Top view

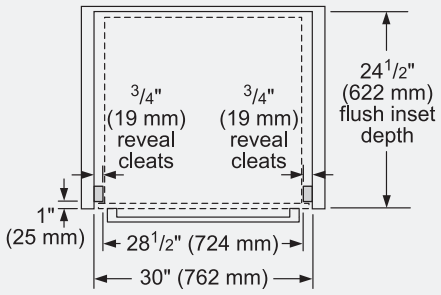

Side view

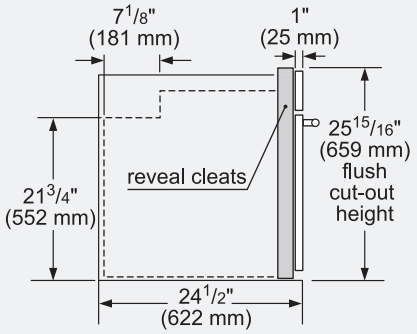

measurements in inches (mm)

SIDE–BY–SIDE INSTALLATION – TOP VIEW

Standard

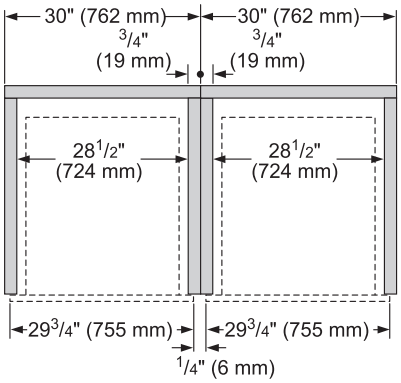

IMPORTANT: When installing an oven in combination, a minimum distance between the ovens is required. Refer to the oven installation manual for all other measurements.

measurements in inches (mm)

Flush

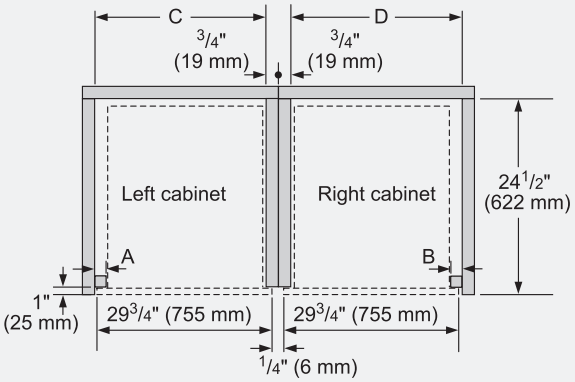

Combination Type	A Left reveal cleat	B Right reveal cleat	C cut-out width	D cut-out width
Flush Bottom hinge	3/4" (19 mm)	3/4" (19 mm)	29 1/4" (743 mm)	29 1/4" (743 mm)
Flush Side Hinge (Left)	1 1/2" (38 mm)	N/A*	30" (762 mm)	N/A*
Flush Side Hinge (Right)	N/A*	1 1/2" (38 mm)	N/A*	30" (762 mm)

*Installation not recommended

measurements in inches (mm)

PODS301W
30-INCH STEAM AND CONVECTION SINGLE BUILT-IN OVEN
PROFESSIONAL SERIES

30-INCH STEAM AND CONVECTION SINGLE OVEN WITH STORAGE DRAWER SDS30WC

Steam Oven with Storage Drawer Wall Mount Installation

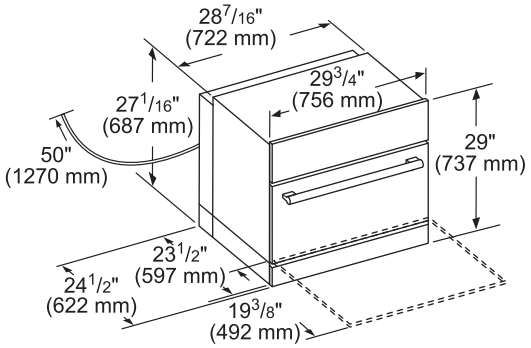

measurements in inches (mm)

Door Handle Depth*

Professional Series Handle

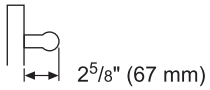

*Protrusion of handle from door skin

Steam Oven with Storage Drawer Wall Mount Installation

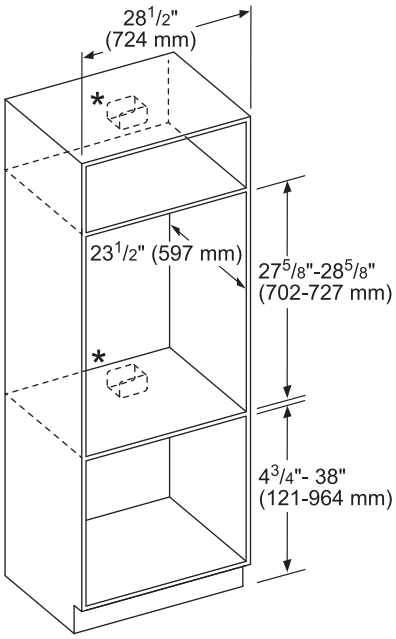

* For single ovens installed into a wall cabinet, the junction box may be located above, beneath, left or right of the unit within reach of the power cord.

measurements in inches (mm)

Steam Oven with Storage Drawer Under-Counter Installation

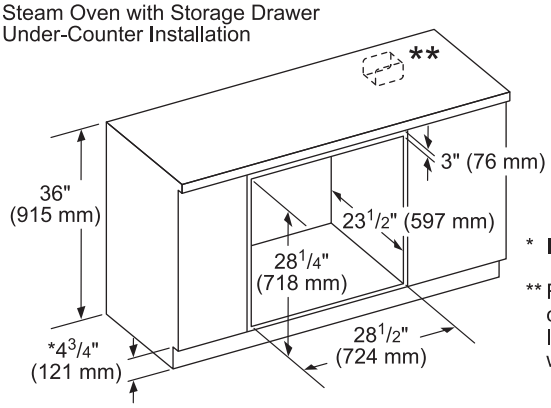

* Includes 3/4" (19 mm) base plate.

** For single ovens installed under a cabinet, the junction box should be located to the right or left of the unit within reach of the power cord.

measurements in inches (mm)

Flush installation Top view

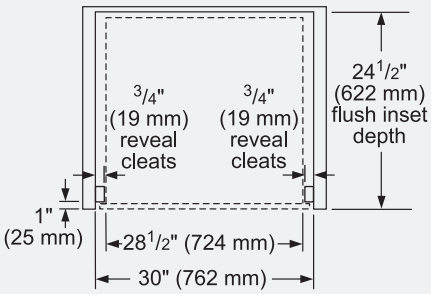

Steam Oven with Storage Drawer – Side View

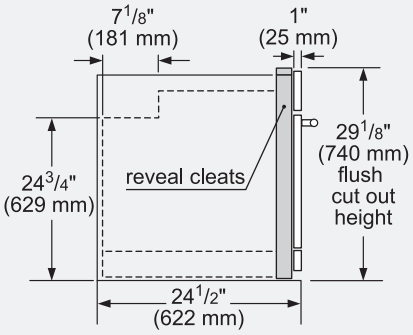

measurements in inches (mm)

PODS301W
30-INCH STEAM AND CONVECTION SINGLE BUILT-IN OVEN
PROFESSIONAL SERIES

30-INCH STEAM AND CONVECTION SINGLE OVEN UNDER SPEED OVEN OR MICROWAVE

Standard installation
30" speed oven or microwave above a steam oven

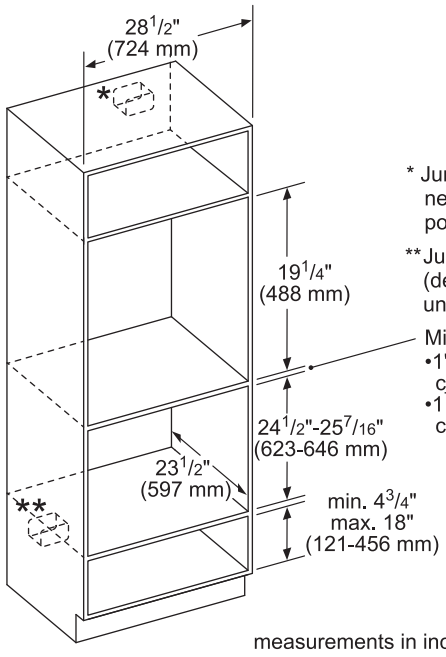

* Junction box may be located above or next to the unit within the reach of the power cable.

**Junction box may be located below (depending on space) or next to the unit within the reach of the power cable.

Minimum dimensions between cut-outs:
- 1" (25 mm) for wall steam oven cut-out height of 25 7/16" (646 mm).
- 1 7/8" (48 mm) for wall steam oven cut-out height of 24 1/2" (623 mm).

measurements in inches (mm)

Flush installation
Speed oven or microwave above a 30" single Steam oven

***Flush installation requires a base plate underneath the body: 30" products–Dimensions: H 5/16" (8 mm) x W 28 1/2" (724 mm) x D 22 1/2" (571 mm)

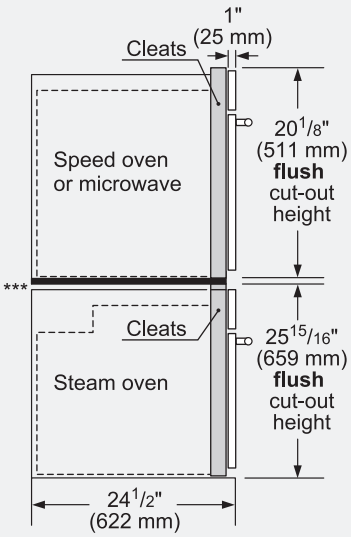

minimum 1/2" (13 mm) required between cut-outs*

*IMPORTANT: Base has to be able to support the weight of the oven. Please check oven manual for minimum weight requirements.

measurements in inches (mm)

PODS301W
30-INCH STEAM AND CONVECTION SINGLE BUILT-IN OVEN
PROFESSIONAL SERIES

INSTALLATION DETAILS

Standard installation
Single oven, double oven or combo oven over warming or storage drawer

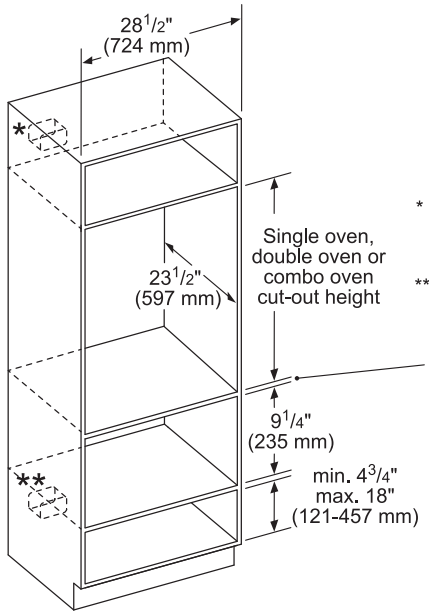

* Wall oven junction box may be located above or to the right or left of the unit within reach or the power cable.

**Electrical hook-up may be located below (depending on space) or next to the drawer within reach of the power cable.

Minimum 3/4" (18 mm) required between cut-outs.

measurements in inches (mm)

Flush installation
Single oven over storage or warming drawer

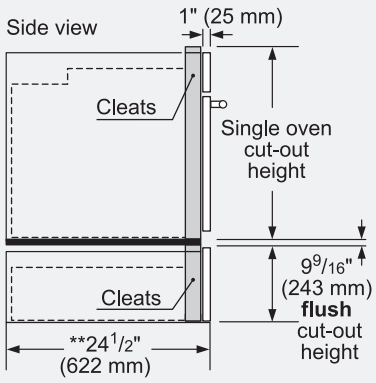

Single wall oven

*IMPORTANT: Base has to be able to support the weight of the oven. Please check oven manual for minimum weight requirements.

minimum 1/2" (13 mm) required between cut-outs*

Warming drawer

**For WD30W, the installed dimension may differ. This drawing based on a 3/4" (19 mm) thick custom panel.

measurements in inches (mm)

These warranties give you specific legal rights and you may have other rights that vary from state to state. Full warranty and limited warranty from date of installation. For complete warranty details, refer to your Use & Care manual, or ask your dealer.

Specifications are for planning purposes only. Refer to installation instructions and consult your countertop supplier prior to making counter opening. Consult with a heating and ventilation engineer for your specific ventilation requirements. For the most detailed information, refer to installation instructions accompanying product or write to Thermador indicating the model number. Specifications are correct at time of printing. Thermador reserves the right to change product specifications or design without notice. Some models are certified for use in Canada. Thermador is not responsible for products that are transported from the U.S. for use in Canada.

1 800 735 4328 | USA THERMADOR.COM | CANADA THERMADOR.CA | ©2018 BSH HOME APPLIANCES CORPORATION. ALL RIGHTS RESERVED.