Assembly Instruction

Advice:
1. Power tools are suggested to be used during installation.
2. More than one person may be required to assemble this product.
3. The best advice is not tightening up any screws until the whole piece is assembled. If having difficulty aligning holes, loosen the screws already installed and readjust the armrest.
4. To avoid mess-up or mismatch, please use the hardware of each box to install the furniture in the same box.

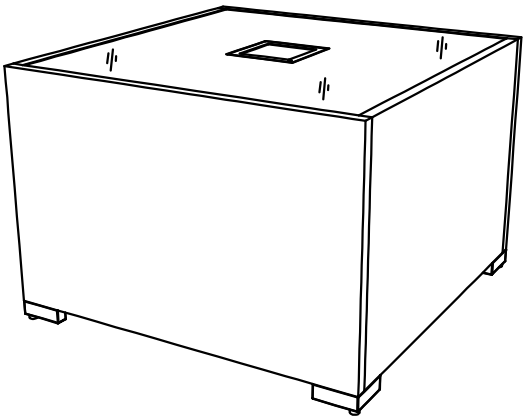

Table

Assembly Video

Parts List

NO.	Picture	Description	QTY
T-A		Glass Top	1
T-B		Support Bracket	1
T-C	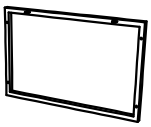	Long Side Panels	2
T-D	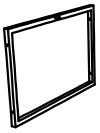	Short Side Panels	2
E		L Shape Foot	4

NO.	Picture	Description	QTY
F		Solar Lamp	1
N		Washer (M6)	12
X		Screw (M6*25)	12
V		Screw (M6*35)	8
L		Allen Key	1

STEP 1

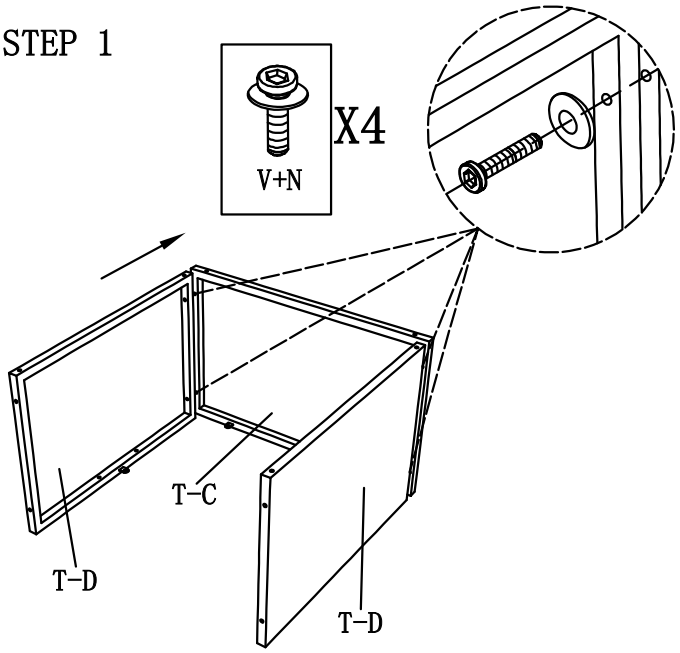

STEP 2

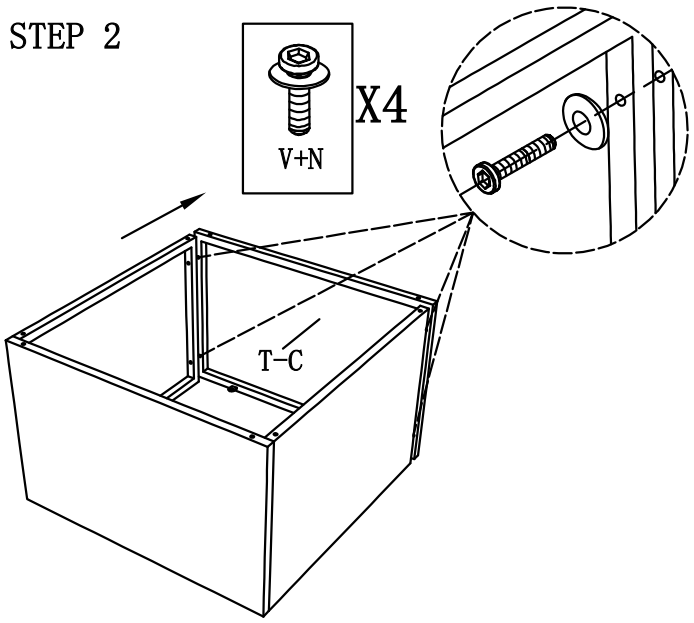

The best advice is not tightening up any screws until the whole piece is assembled.

STEP 3

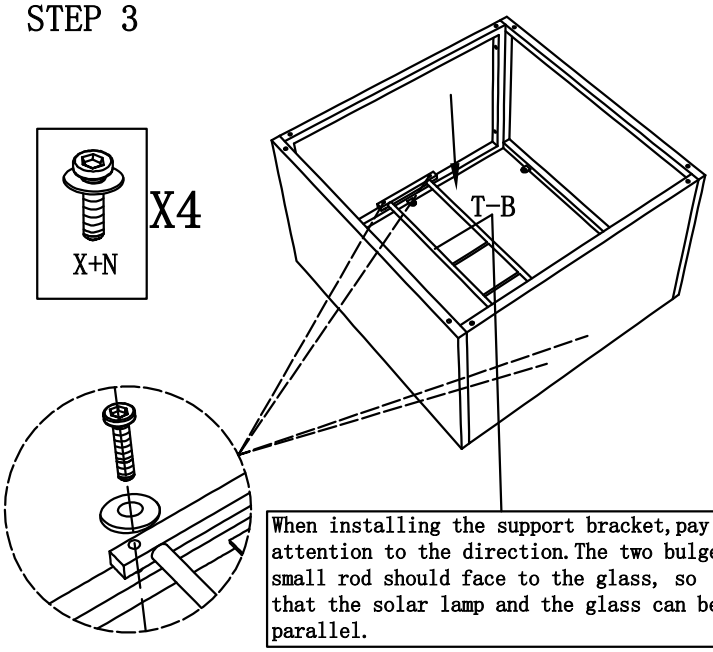

When installing the support bracket, pay attention to the direction. The two bulged small rod should face to the glass, so that the solar lamp and the glass can be parallel.

STEP 4

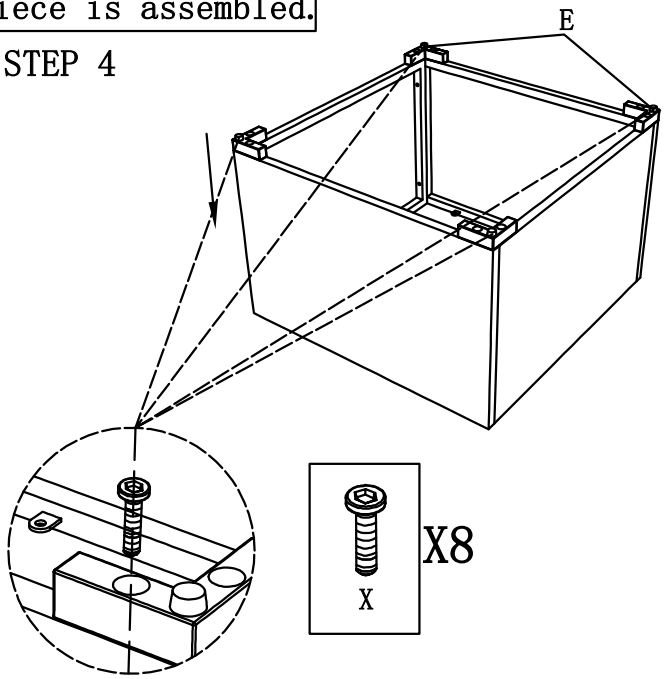

STEP 5

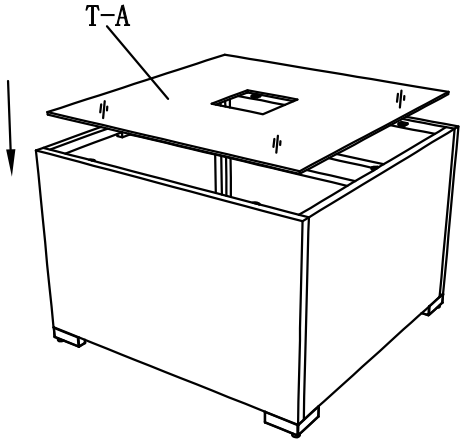

FINISH

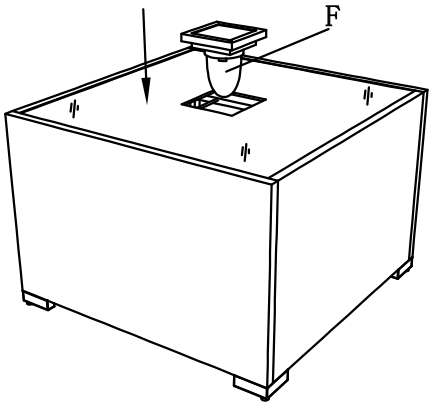

Assembly Instruction

Advice:
1. Power tools are suggested to be used during installation.
2. More than one person may be required to assemble this product.
3. The best advice is not tightening up any screws until the whole piece is assembled. If having difficulty aligning holes, loosen the screws already installed and readjust the armrest.
4. To avoid mess-up or mismatch, please use the hardware of each box to install the furniture in the same box.

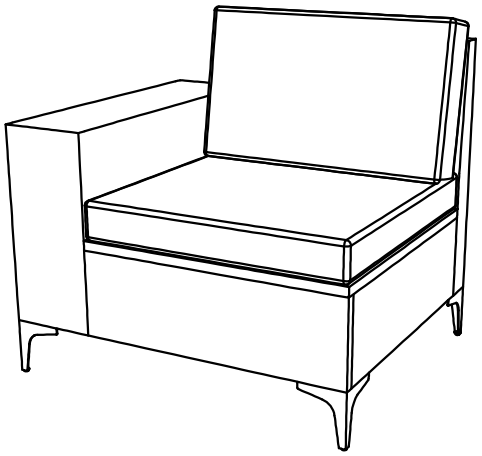

Right Arm Sofa

Assembly Video

Parts List

NO.	Picture	Description	QTY
RA-A	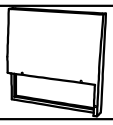	Sofa Back	1
RA-B	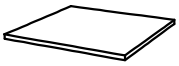	Sofa Seat	1
RA-C		Front Panel	1
RA-D	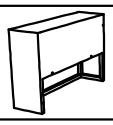	Right Arm	1
RA-E		Side Panel	1
RA-F		Sofa Leg	4
RA-G		Back Cushion	1
RA-H		Seat Cushion	1

F		Fastener Clip	2
Z5		Screw (M6*15)	8
V		Screw (M6*35)	5
T		Screw (M6*45)	1
S		Screw (M6*60)	7
N		Washer (M6)	28
M		Nut (M6)	7
L		Allen Key	1
J	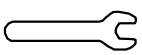	Wrench (M6)	1

STEP 1

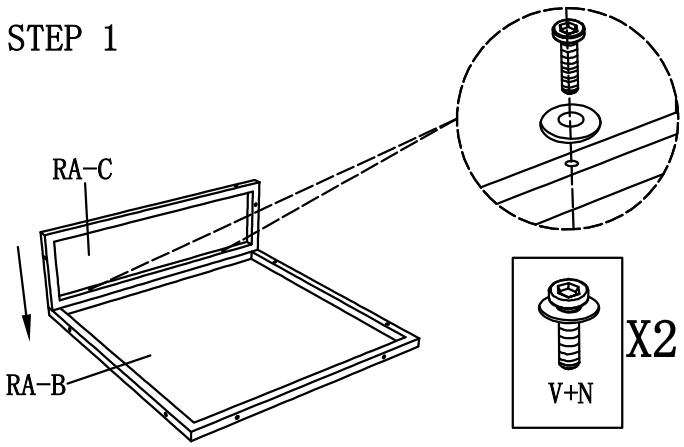

STEP 2

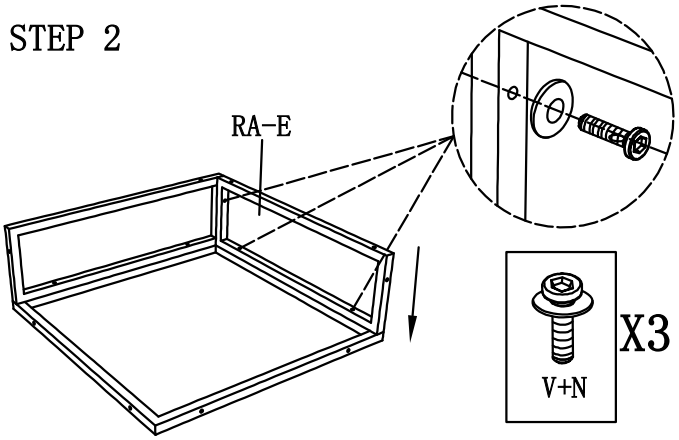

The best advice is not tightening up any screws until the whole piece is assembled.

STEP 3

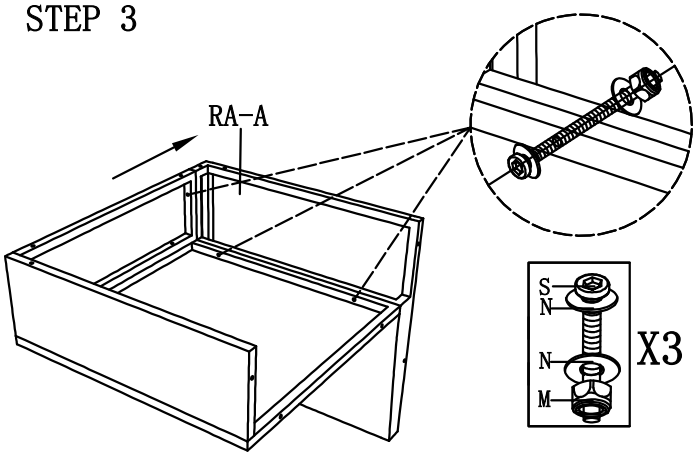

STEP 4

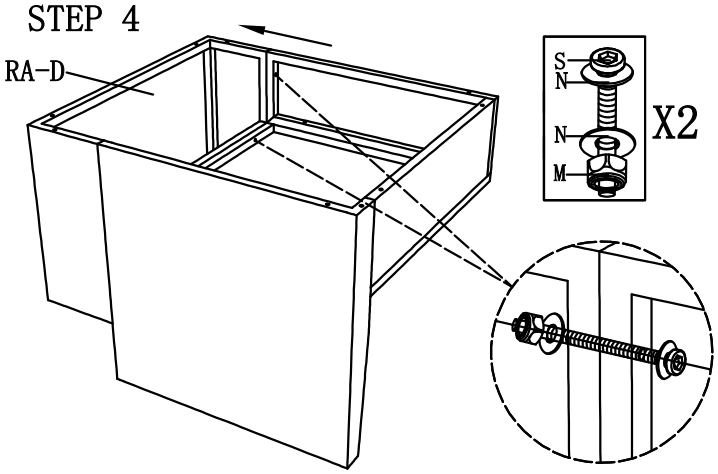

STEP 5

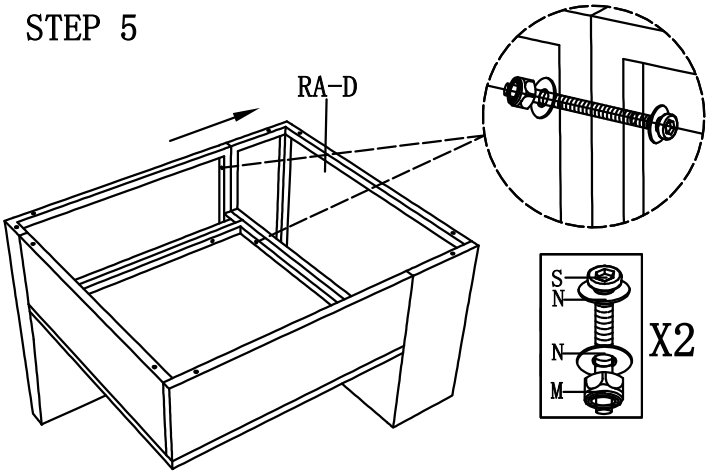

STEP 6

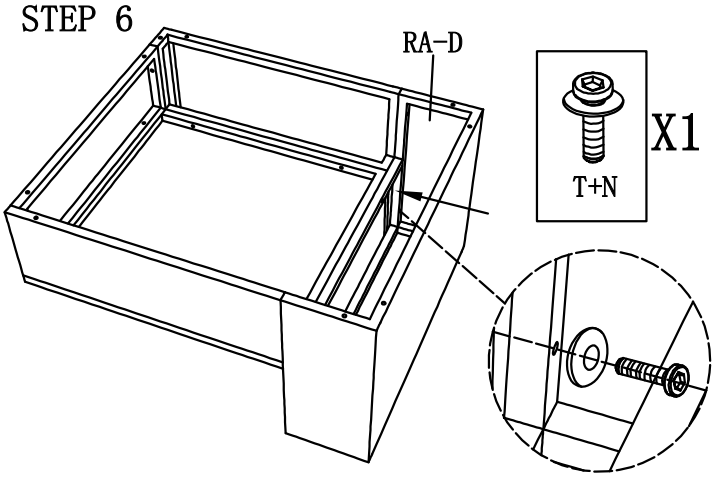

STEP 7

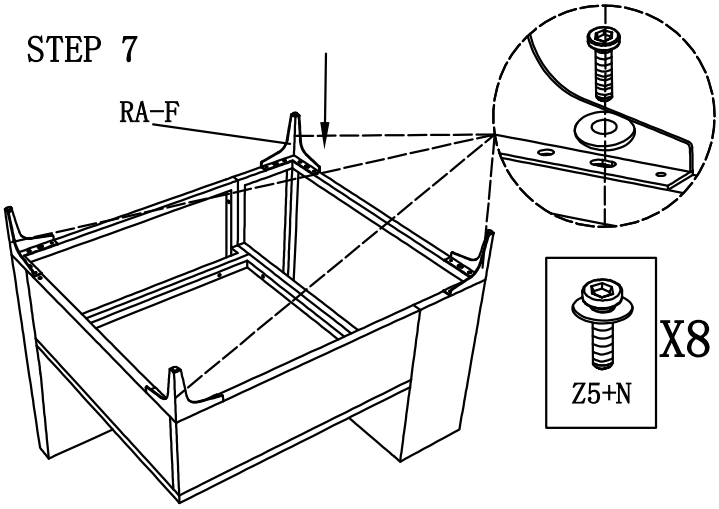

FINISH

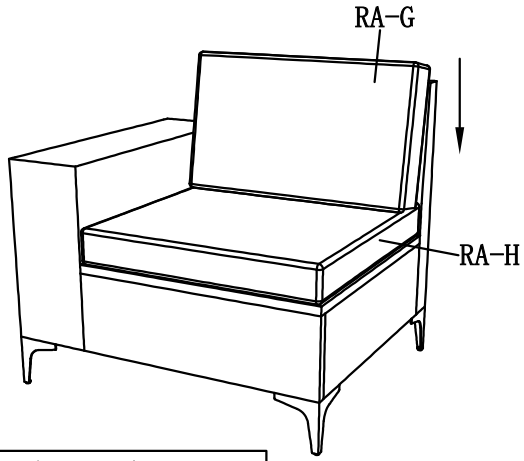

Please tap the cushions and wait 48 to 72 hours to fully rebound

Assembly Instruction

Advice:
1. Power tools are suggested to be used during installation.
2. More than one person may be required to assemble this product.
3. The best advice is not tightening up any screws until the whole piece is assembled. If having difficulty aligning holes, loosen the screws already installed and readjust the armrest.
4. To avoid mess-up or mismatch, please use the hardware of each box to install the furniture in the same box.

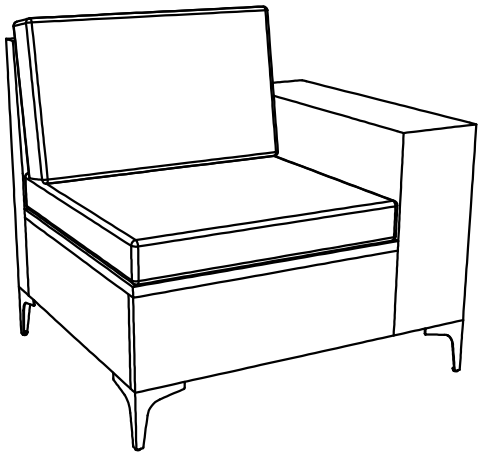

Left Arm Sofa

Assembly Video

Parts List

NO.	Picture	Description	QTY
LA-A	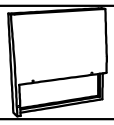	Sofa Back	1
LA-B		Sofa Seat	1
LA-C		Front Panel	1
LA-D		Side Panel	1
LA-E	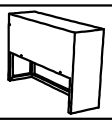	Left Arm	1
LA-F		Sofa Leg	4
LA-G		Back Cushion	1
LA-H	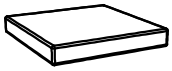	Seat Cushion	1

F		Fastener Clip	2
Z5		Screw (M6*15)	8
V		Screw (M6*35)	5
T		Screw (M6*45)	1
S		Screw (M6*60)	7
N		Washer (M6)	28
M		Nut (M6)	7
L		Allen Key	1
J	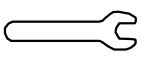	Wrench (M6)	1

STEP 1

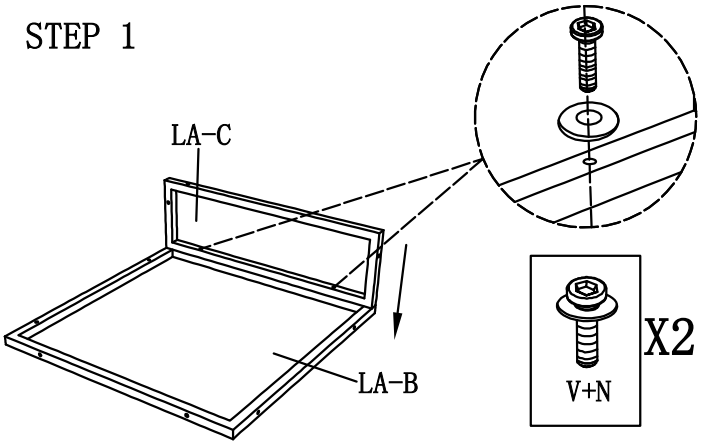

STEP 2

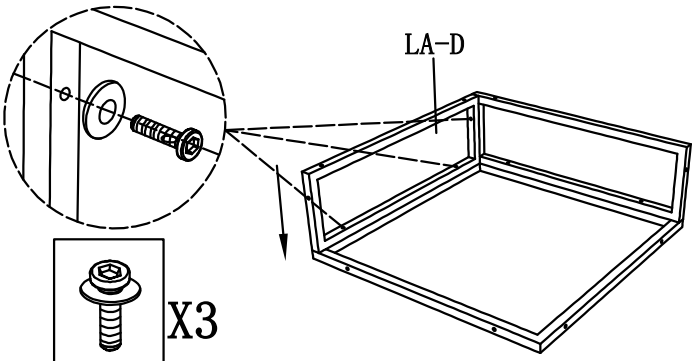

The best advice is not tightening up any screws until the whole piece is assembled.

STEP 3

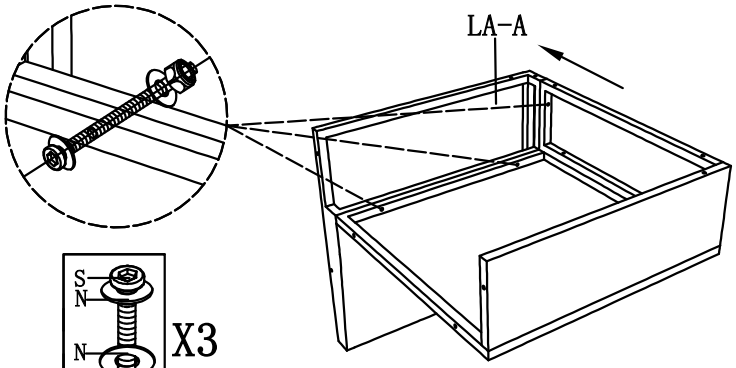

STEP 4

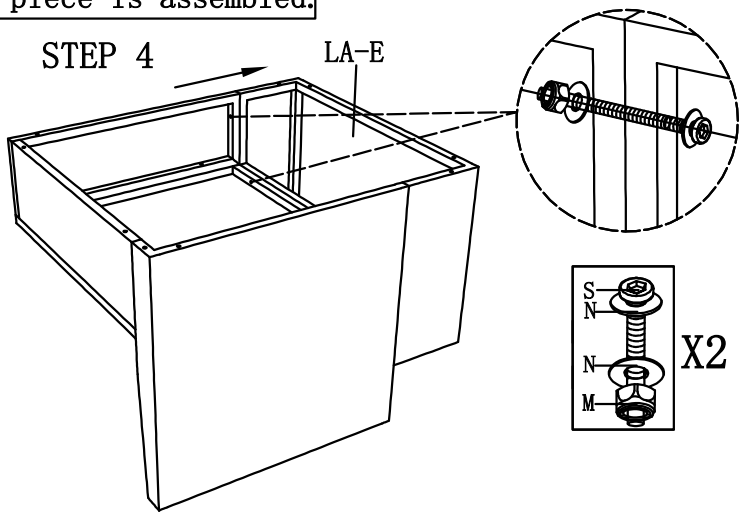

STEP 5

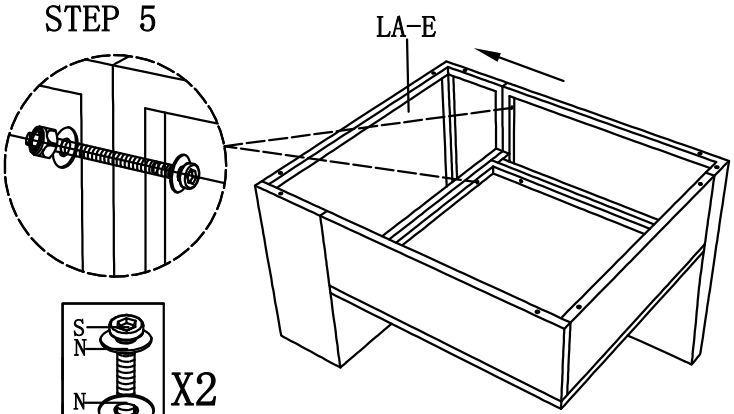

STEP 6

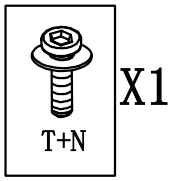

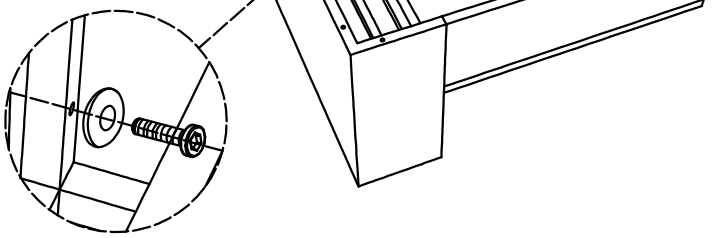

STEP 7

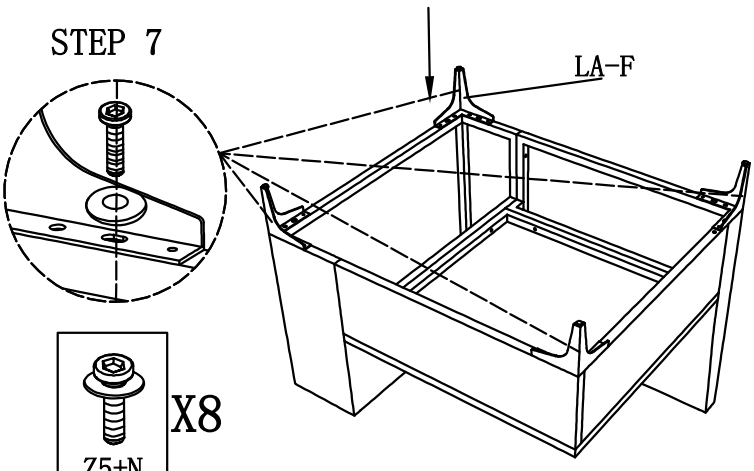

FINISH

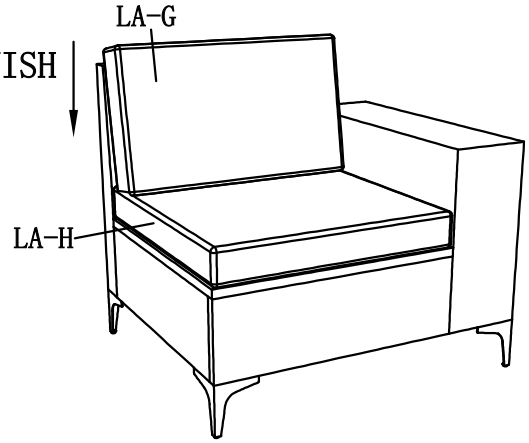

Please tap the cushions and wait 48 to 72 hours to fully rebound

Assembly Instruction

Advice:
1. Power tools are suggested to be used during installation.
2. More than one person may be required to assemble this product.
3. The best advice is not tightening up any screws until the whole piece is assembled. If having difficulty aligning holes, loosen the screws already installed and readjust the armrest.
4. To avoid mess-up or mismatch, please use the hardware of each box to install the furniture in the same box.

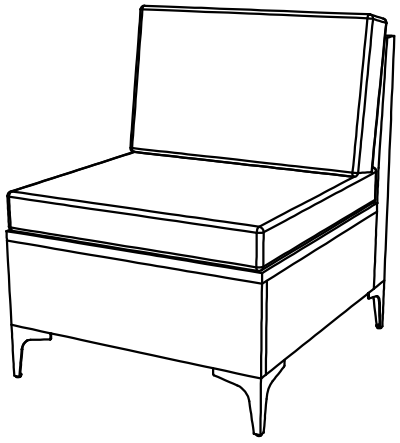

Armless Sofa

Assembly Video

Parts List

NO.	Picture	Description	QTY
AS-A		Sofa Back	1
AS-B	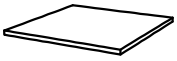	Sofa Seat	1
AS-C		Front Panel	1
AS-E	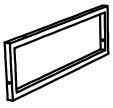	Side Panel	2
AS-F		Sofa Leg	4
AS-G		Back Cushion	1
AS-H		Seat Cushion	1

F		Fastener Clip	2
Z5		Screw (M6*15)	8
V		Screw (M6*35)	8
S		Screw (M6*60)	4
N		Washer (M6)	24
M		Nut (M6)	4
L		Allen Key	1
J	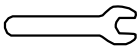	Wrench (M6)	1

STEP 1

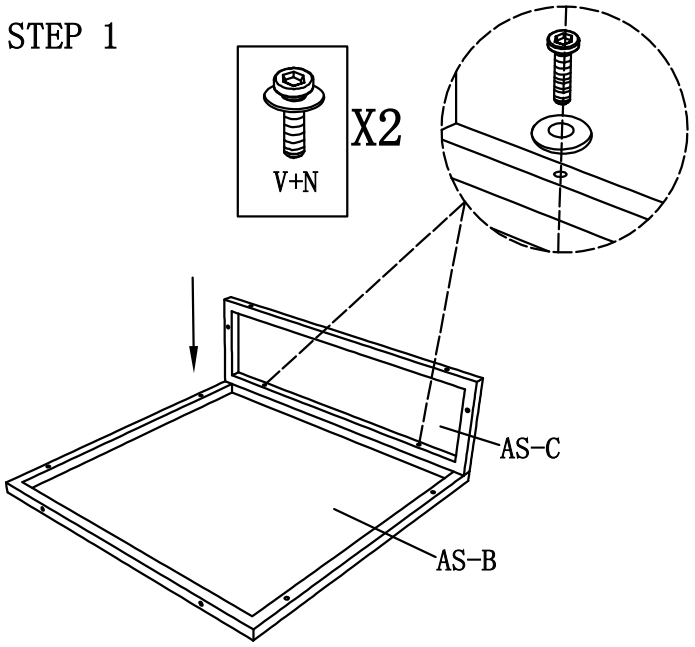

STEP 2

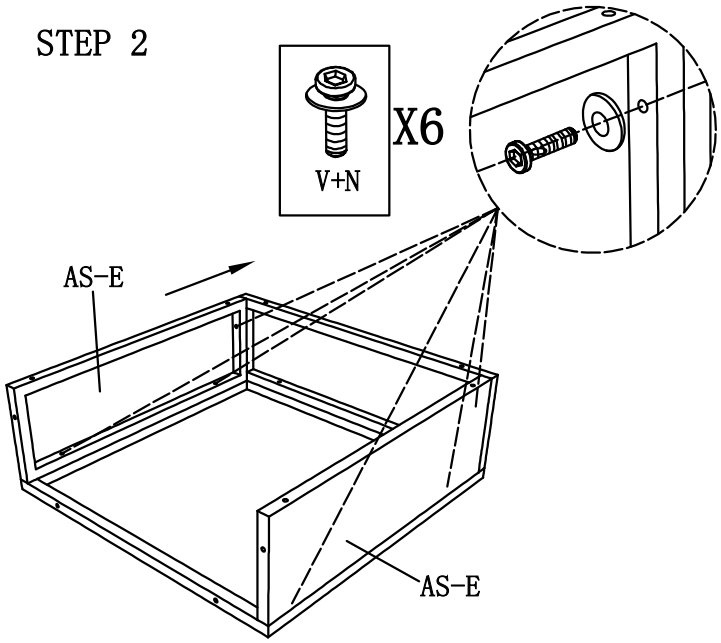

The best advice is not tightening up any screws until the whole piece is assembled.

STEP 3

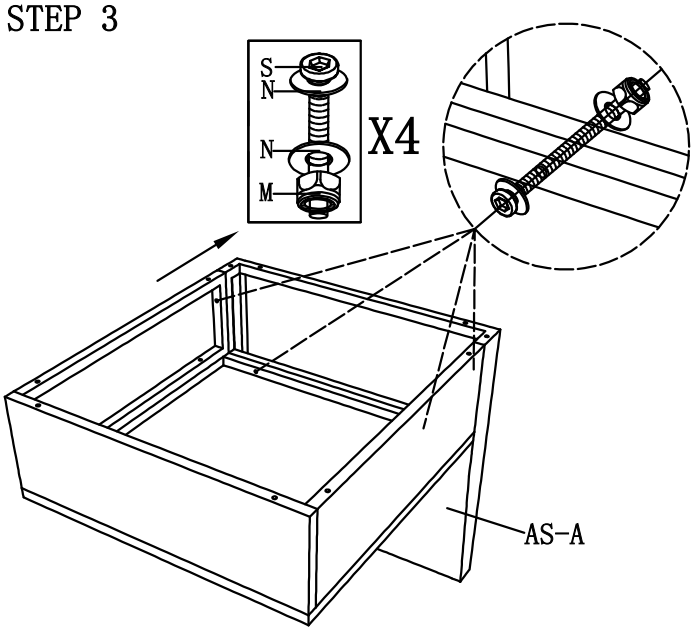

STEP 4

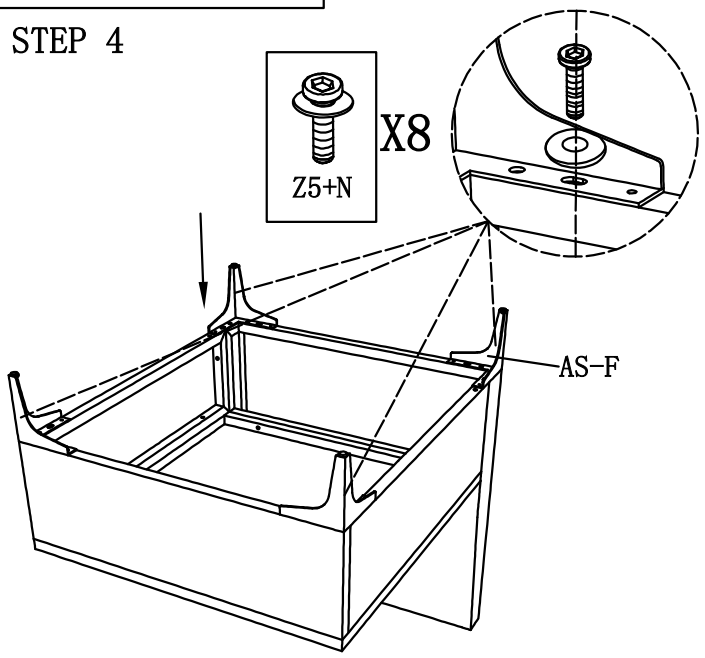

FINISH

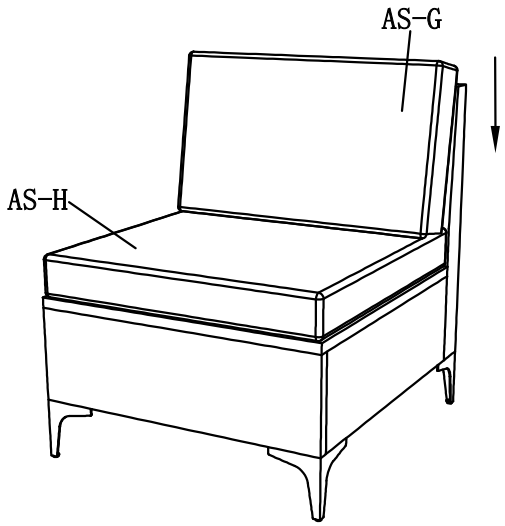

Please tap the cushions and wait 48 to 72 hours to fully rebound

Assembly Instruction

Advice:
1. Power tools are suggested to be used during installation.
2. More than one person may be required to assemble this product.
3. The best advice is not tightening up any screws until the whole piece is assembled. If having difficulty aligning holes, loosen the screws already installed and readjust the armrest.
4. To avoid mess-up or mismatch, please use the hardware of each box to install the furniture in the same box.

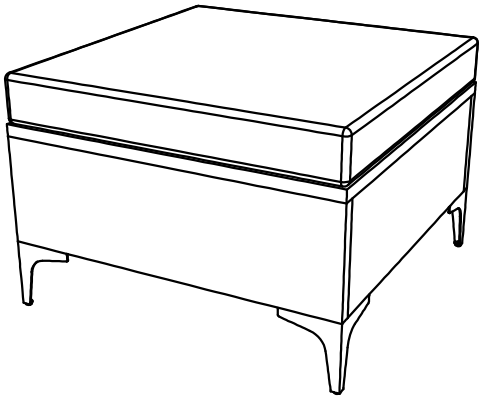

Ottoman

Assembly Video

Parts List

NO.	Picture	Description	QTY
O-A		Sofa Seat	1
O-B		Long Side Panels	2
O-C	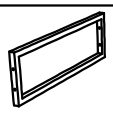	Short Side Panels	2
O-F		Sofa Leg	4
O-H	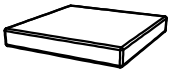	Seat Cushion	1

NO.	Picture	Description	QTY
Z5		Screw (M6*15)	8
V		Screw (M6*35)	14
N		Washer (M6)	22
L		Allen Key	1

STEP 1

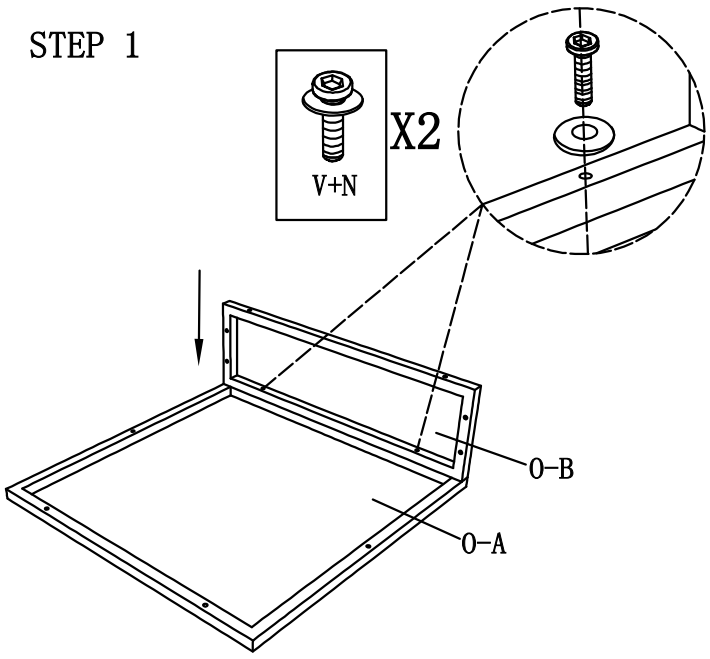

STEP 2

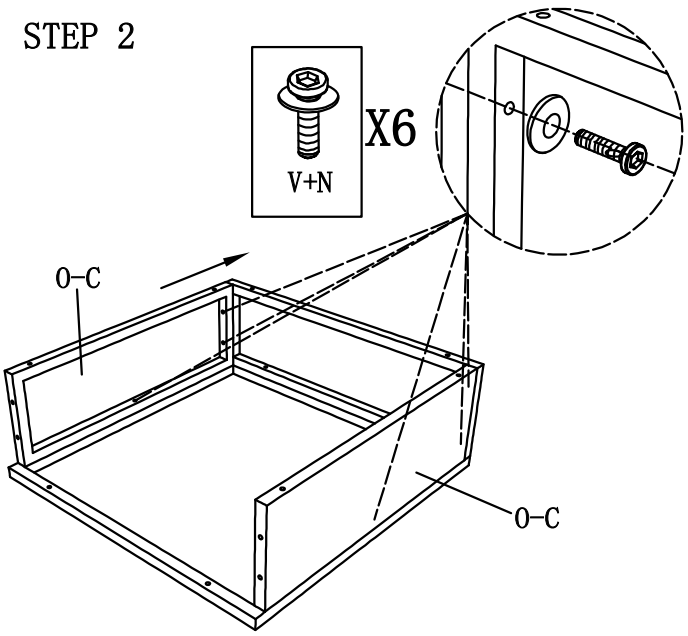

The best advice is not tightening up any screws until the whole piece is assembled.

STEP 3

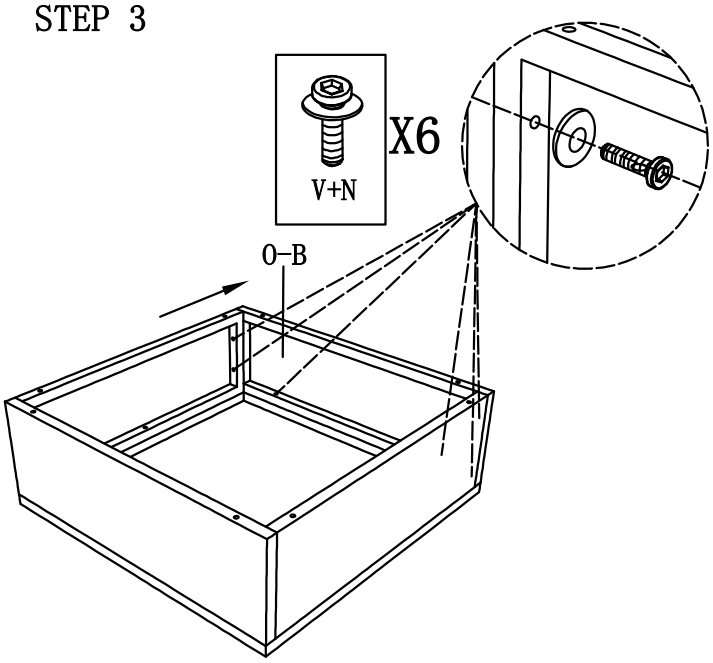

STEP 4

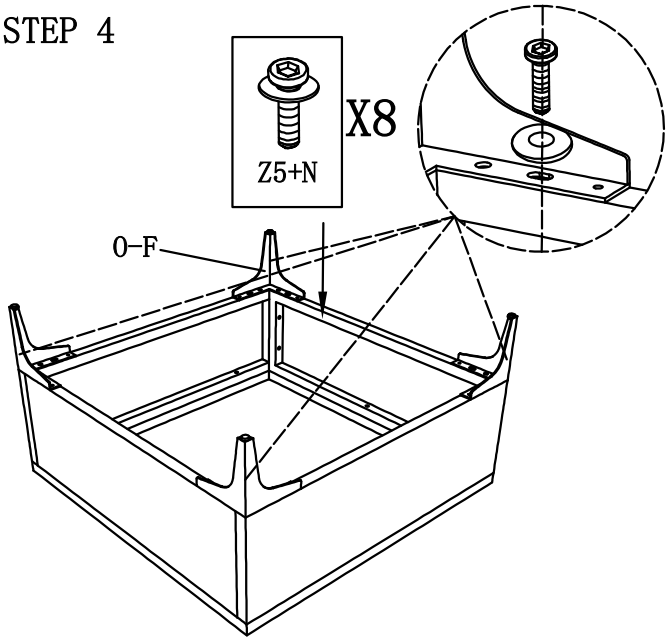

FINISH

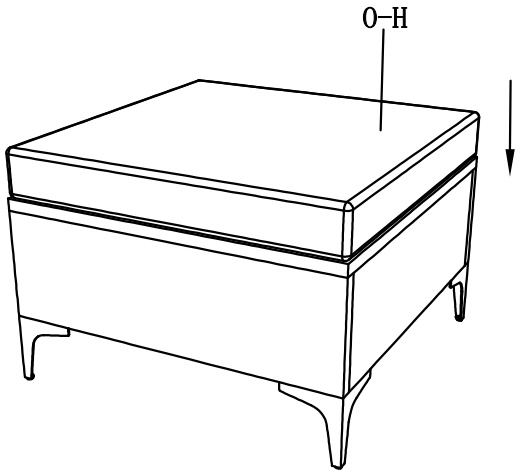

Please tap the cushions and wait 48 to 72 hours to fully rebound